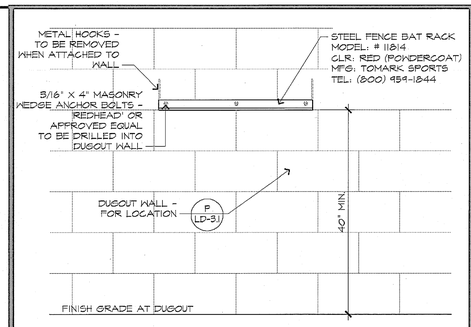

M | BAT RACK | NO SCALE

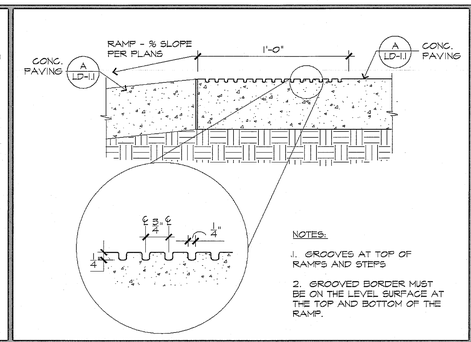

I | ADA GROOVE EDGE | NO SCALE

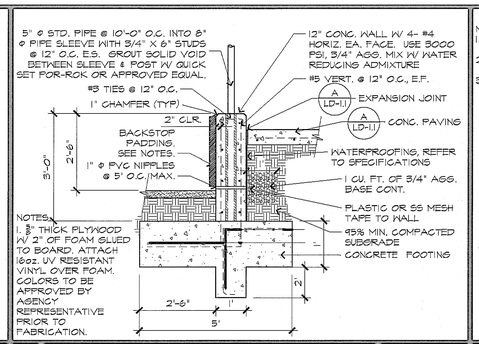

E | WALL AT BACKSTOP | NO SCALE

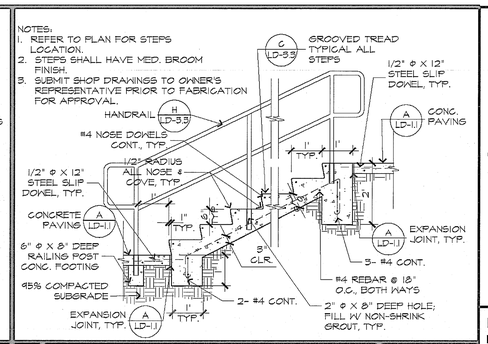

A | CONCRETE STEPS | NO SCALE

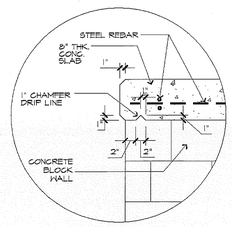

N | CONCRETE CHAMFER | NO SCALE

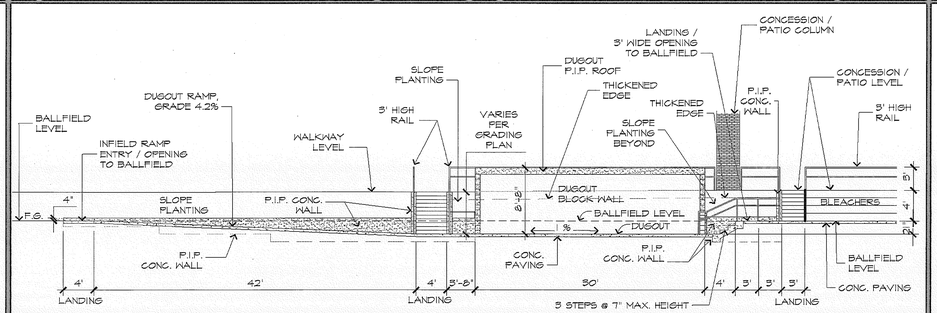

J | REPLICA DUGOUT STEPS, WALLS AND RAMP | NO SCALE

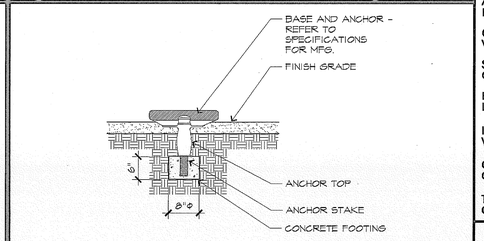

B | INFIELD BASE ANCHOR | NO SCALE

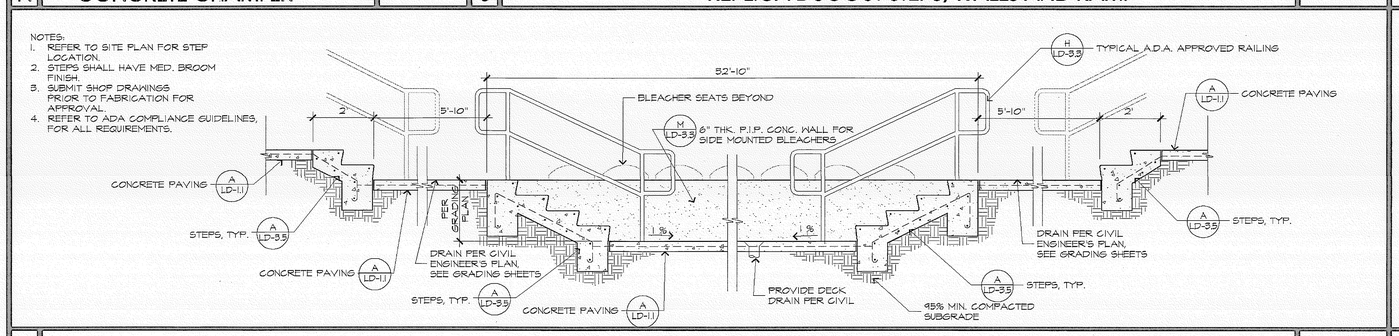

O | STADIUM SEATING AT BACK STEPS | NO SCALE

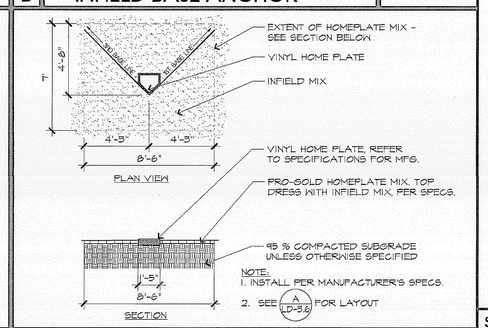

C | HOME PLATE | NO SCALE

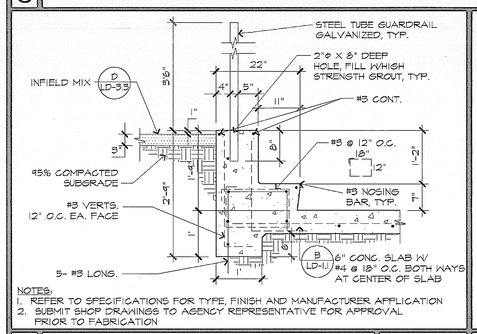

P | DUGOUT RAIL | NO SCALE

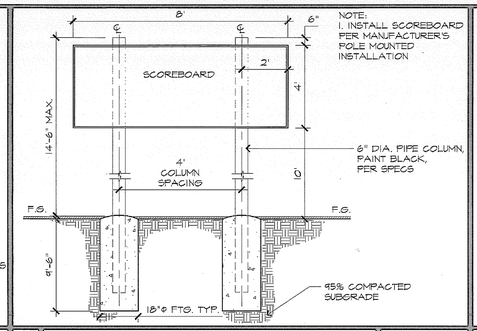

L | SCOREBOARD | NO SCALE

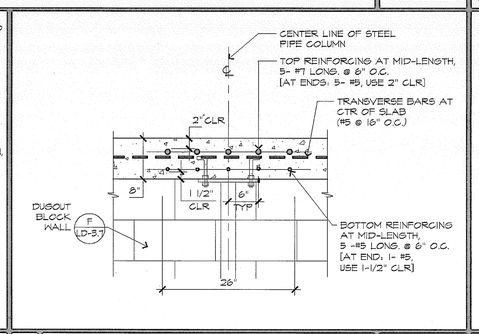

H | CONCRETE BEAM @ DUGOUT ROOF | NO SCALE

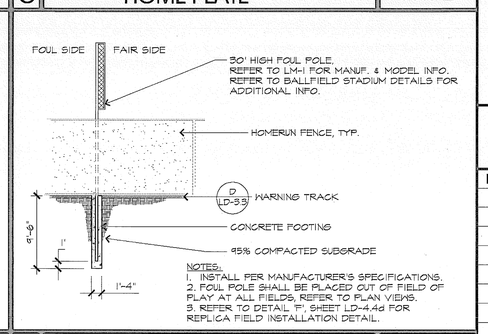

D | FOUL POLE | NO SCALE

MIG

MOORE IACOFANO GOLTSMAN, INC.
801 N. HARBOR BLVD.
FULLERTON, CA 92832
TEL 714/871-3638
FAX 714/871-1188
www.migcom.com

CONSULTANT:

PROJECT TEAM:
LANDSCAPE ARCHITECT
MIG INC.

ARCHITECT
PITASSI ARCHITECTS INC.

CIVIL ENGINEERS/SURVEYOR
WALDEN & ASSOCIATES

STRUCTURAL ENGINEERS
CORREIA CONSULTING & DESIGN

ELECTRICAL ENGINEERS
LRA ENGINEERS

IRRIGATION DESIGNER
WILLIAMS IRRIGATION DESIGN

GEOTECHNICAL ENGINEERS
CONVERSE CONSULTANTS

TURF GRASS CONSULTANT
GUISE AND ASSOCIATES

PERRIS VALLEY Big League Dreams

2155 Trumble Road
Perris, California, 92570

SHEET TITLE
BALLFIELD STADIUM DETAILS

100% CONSTRUCTION DOCUMENT

DATE	REVISIONS

STAMP

CHECKED BY	DATE
RE	
DATE 01-07-10	FILE NAME
DRAWN BY HD	SHEET LD-3.5
JOB NO. 05208.00	
SCALE AS NOTED	227 OF 313 SHEETS