CAISSON DETAIL — C

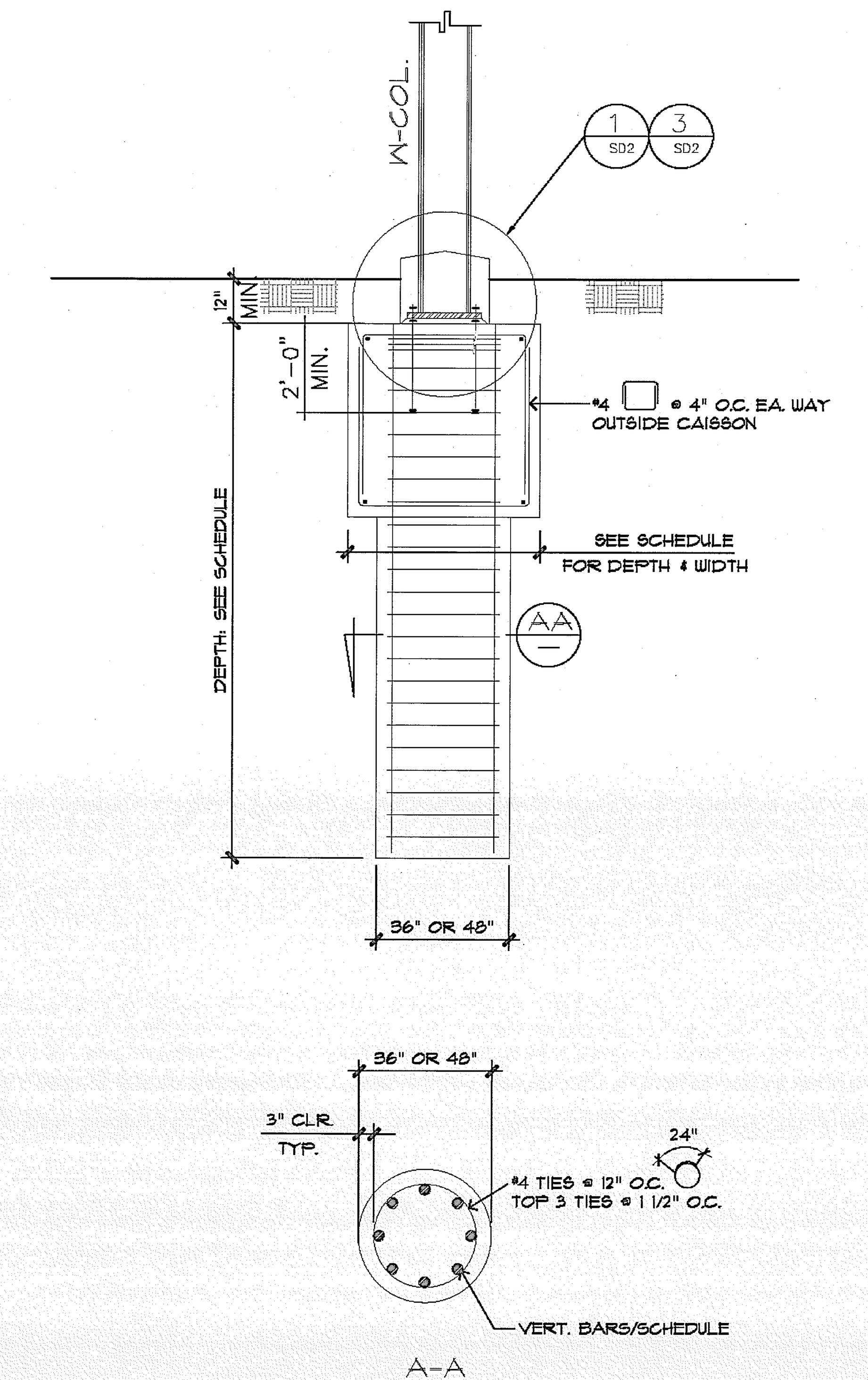

CAISSON SCHEDULE					
COLUMN	REBAR	LENGTH	DIAMETER	Fc' (PSI)	CAP SIZE
W14x43	(8) #8	10'-0"	3'-0"	4000	4'-0"
W14x53	(8) #8	11'-0"	3'-0"	4000	4'-0"
W14x90	(10) #9	22'-0"	4'-0"	6000	NO CAP

NOTES:

*PROVIDE STD. 90° OR 180° HOOKS AT TOP OF VERT. REBARS.

* SEE (2/SD-2) FOR BASE PLATE AND ANCHOR BOLT SCHEDULE

DODGER STADIUM- PLAN VIEW — A

SCALE: 1" = 30'-0"

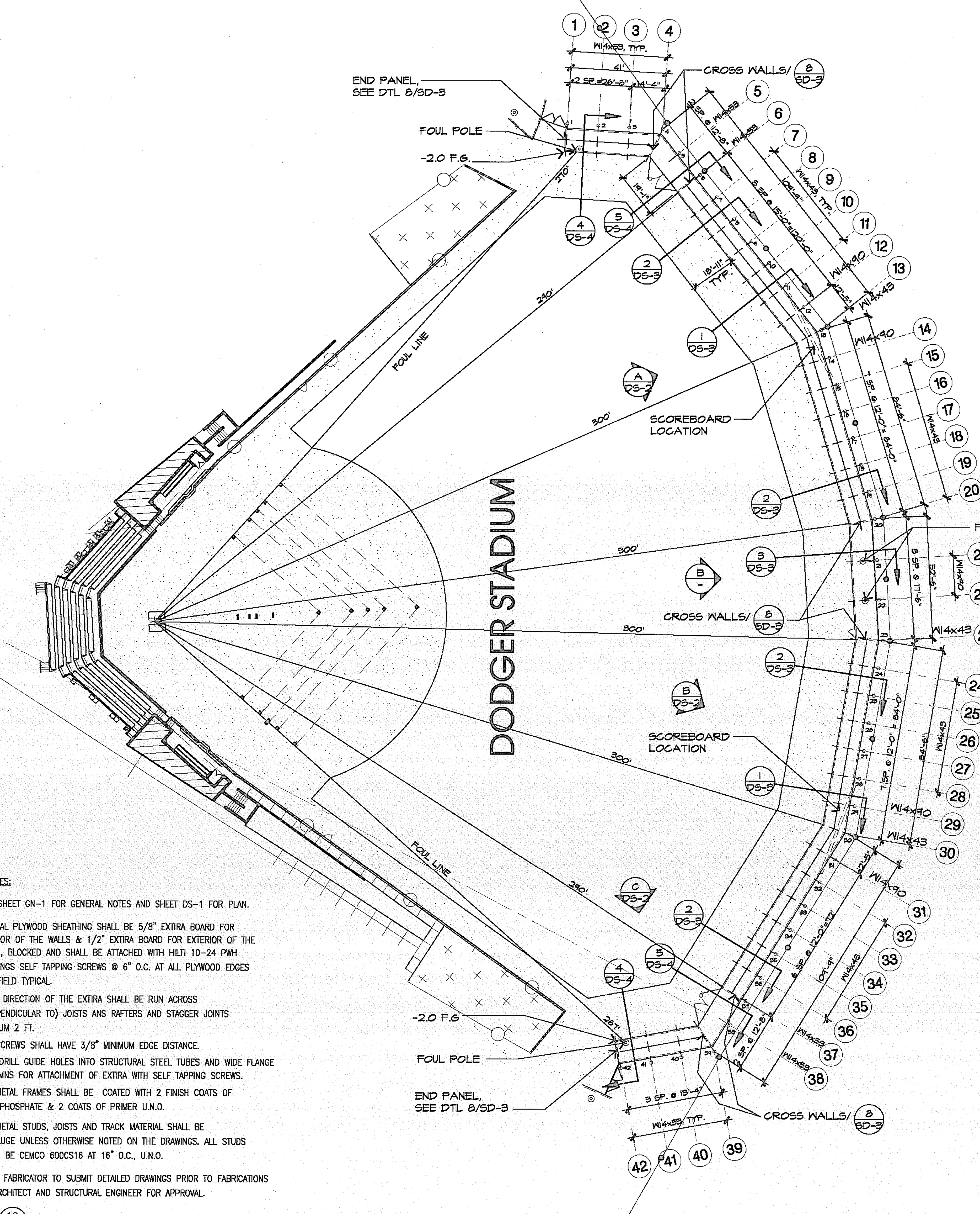

PLAN NOTES:

1. SEE SHEET GN-1 FOR GENERAL NOTES AND SHEET DS-1 FOR PLAN.
2. TYPICAL PLYWOOD SHEATHING SHALL BE 5/8" EXTIRA BOARD FOR INTERIOR OF THE WALLS & 1/2" EXTIRA BOARD FOR EXTERIOR OF THE WALLS, BLOCKED AND SHALL BE ATTACHED WITH HILTI 10-24 PWH #3 WINGS SELF TAPPING SCREWS @ 6" O.C. AT ALL PLYWOOD EDGES AND FIELD TYPICAL.
3. LONG DIRECTION OF THE EXTIRA SHALL BE RUN ACROSS (PERPENDICULAR TO) JOISTS ANS RAFTERS AND STAGGER JOINTS MINIMUM 2 FT.
4. ALL SCREWS SHALL HAVE 3/8" MINIMUM EDGE DISTANCE.
5. PRE-DRILL GUIDE HOLES INTO STRUCTURAL STEEL TUBES AND WIDE FLANGE COLUMNS FOR ATTACHMENT OF EXTIRA WITH SELF TAPPING SCREWS.
6. ALL METAL FRAMES SHALL BE COATED WITH 2 FINISH COATS OF ZINC PHOSPHATE & 2 COATS OF PRIMER U.N.O.
7. ALL METAL STUDS, JOISTS AND TRACK MATERIAL SHALL BE 16 GAUGE UNLESS OTHERWISE NOTED ON THE DRAWINGS. ALL STUDS SHALL BE CEMCO 600CS16 AT 16" O.C., U.N.O.
8. STEEL FABRICATOR TO SUBMIT DETAILED DRAWINGS PRIOR TO FABRICATIONS TO ARCHITECT AND STRUCTURAL ENGINEER FOR APPROVAL.
9. SEE (12/SD-2) FOR TYPICAL PLAN VIEW AT WIDE FLANGE COLUMNS.

DODGER STADIUM - OUTFIELD FENCING ELEVATION — B

NOT TO SCALE

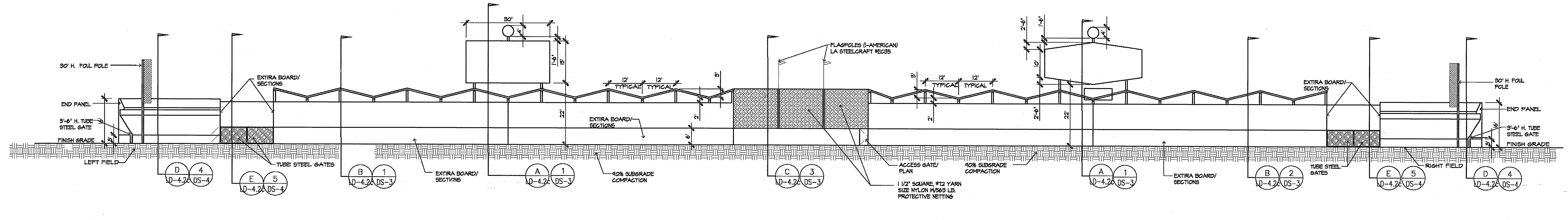

MOORE IACOFANO GOLTSMAN, INC.
801 N. HARBOR BLVD.
FULLERTON, CA 92831
TEL 714/871-3638
FAX 714/871-1188
www.migcom.com

CONSULTANT:

CORREIA CONSULTING & DESIGN
STRUCTURAL ENGINEERS
16912 bolsa chica road, suite 101
huntington beach, ca 92649
714 840-5582

PROJECT TEAM:

LANDSCAPE ARCHITECT
MOORE IACOFANO GOLTSMAN, INC.

ARCHITECT
PITASSI ARCHITECTS INC.

CIVIL ENGINEERS/SURVEYOR
WALDEN & ASSOCIATES

STRUCTURAL ENGINEERS
CORREIA CONSULTING & DESIGN

ELECTRICAL ENGINEERS
LRA ENGINEERS

IRRIGATION DESIGNER
WILLIAMS IRRIGATION DESIGN

GEOTECHNICAL ENGINEERS
CONVERSE CONSULTANTS

TURF GRASS CONSULTANT
GUISE AND ASSOCIATES

PERRIS VALLEY Big League Dreams

2155 Trumble Road
Perris, California, 92570

SHEET TITLE

DODGER STADIUM PLAN VIEW

100% CONSTRUCTION DOCUMENT

DATE	REVISIONS

STAMP

REGISTERED PROFESSIONAL ENGINEER WILLIAM J. CORREIA No. 2132 Exp.12/31/09 STRUCTURAL STATE OF CALIFORNIA

(08047)

CHECKED BY	DATE
XX	07/30/09

DATE 7-30-09	FILE NAME
DRAWN BY STAFF	SHEET
JOB NO. 05208.00	DS-1
SCALE AS NOTED	OF 311 SHEETS