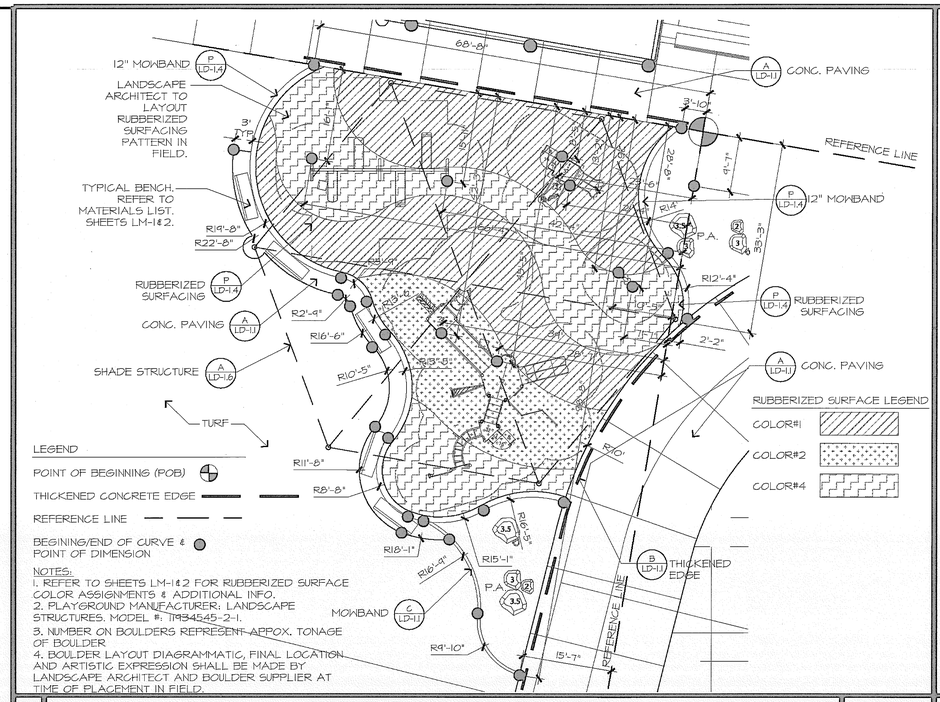

N 5-12 YEAR OLD TOT LOT - AREA #1 NO SCALE

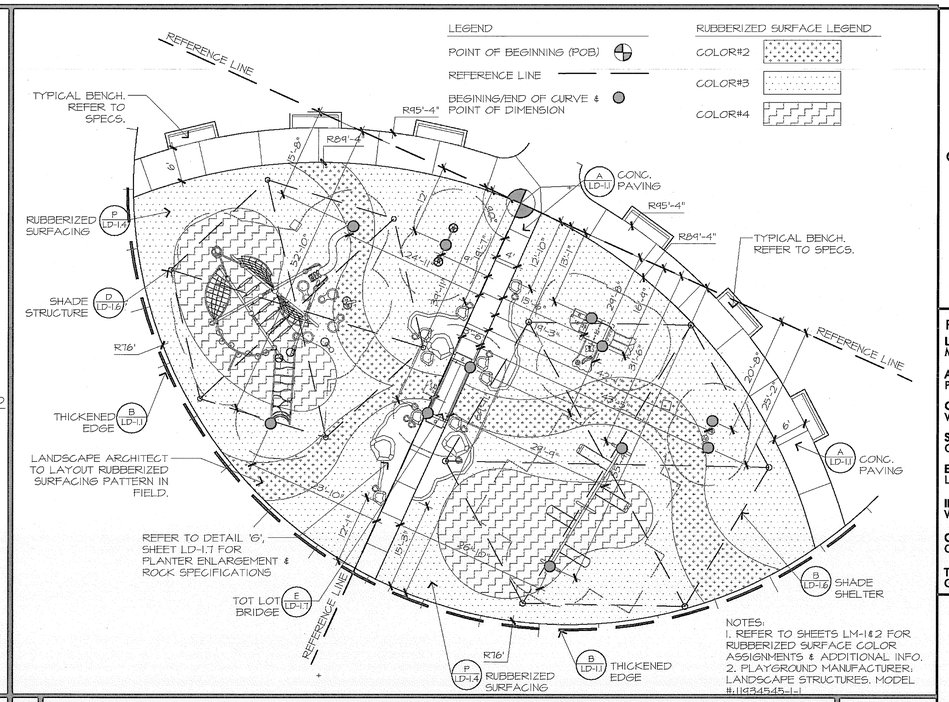

F 5-12 YEAR OLD TOT LOT - AREA #2 NO SCALE

O NOT USED NO SCALE

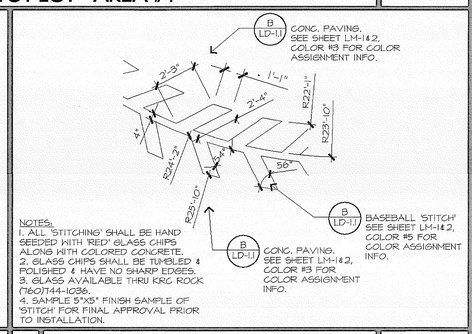

K CONC. 'STITCH' ENLARGEMENT NO SCALE

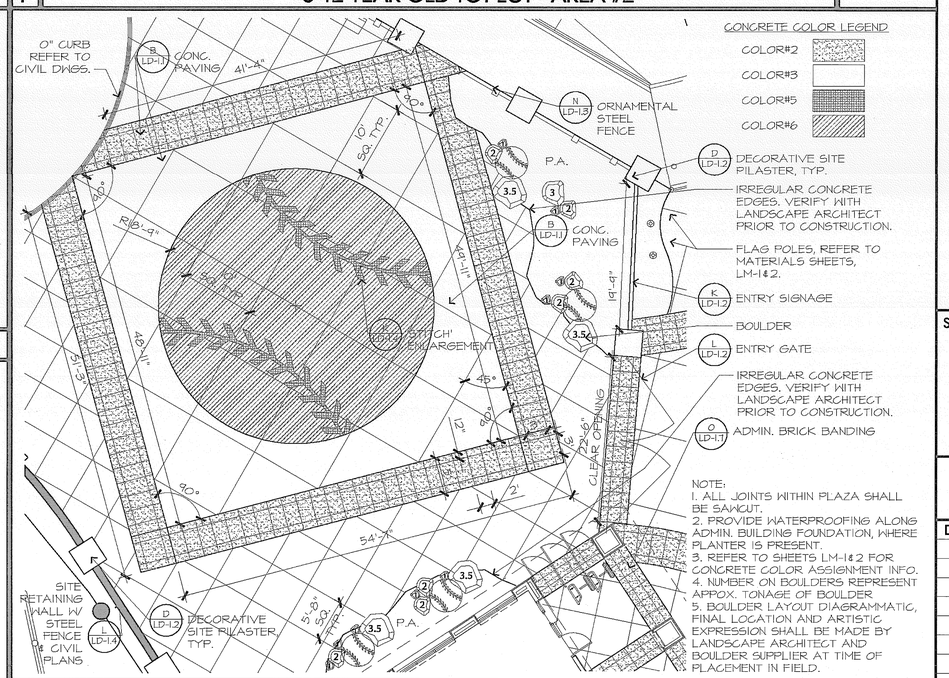

H DECORATIVE ENTRY PAVING NO SCALE

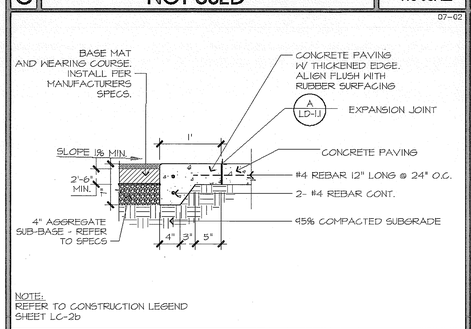

P RUBBERIZED SURFACING NO SCALE

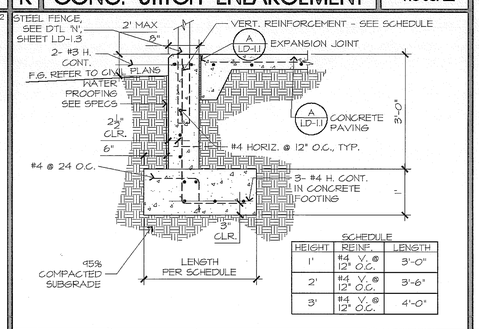

L SITE RETAINING WALL NO SCALE

MIG
MOORE IACOFANO GOLTSMAN, INC.
801 N. HARBOR BLVD.
FULLERTON, CA 92832
TEL 714/871-2638
FAX 714/871-1188
www.migcom.com

CONSULTANT:

PROJECT TEAM:
LANDSCAPE ARCHITECT
MIG INC.
ARCHITECT
PITASSI ARCHITECTS INC.
CIVIL ENGINEERS/SURVEYOR
WALDEN & ASSOCIATES
STRUCTURAL ENGINEERS
CORREIA CONSULTING & DESIGN
ELECTRICAL ENGINEERS
LRA ENGINEERS
IRRIGATION DESIGNER
WILLIAMS IRRIGATION DESIGN
GEOTECHNICAL ENGINEERS
CONVERSE CONSULTANTS
TURF GRASS CONSULTANT
GUISE AND ASSOCIATES

PERRIS VALLEY Big League Dreams

2155 Trumble Road
Perris, California, 92570

SHEET TITLE
GENERAL DETAILS

100% CONSTRUCTION DOCUMENT

DATE	REVISIONS

STAMP

CHECKED BY: RE
DATE:
DATE: 01-07-10
FILE NAME:
DRAWN BY: HD
JOB NO. 05208.00
SCALE: AS NOTED
SHEET: LD-1.4
212 OF 313 SHEETS