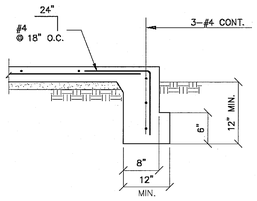

TURNDOWN EDGE | 5

BAR DETAIL

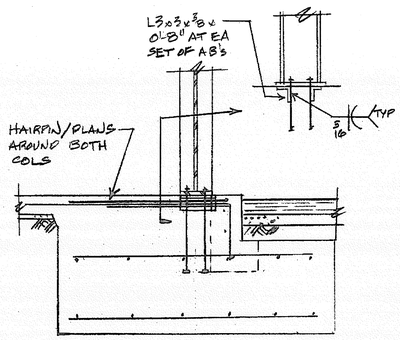

FOOTING DETAIL | 6

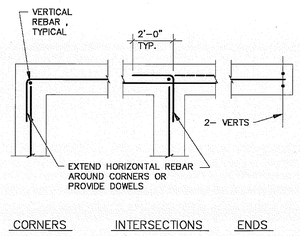

TYPICAL REINFORCING AT FOOTING & WALL CORNERS & INTERSECTIONS | 2

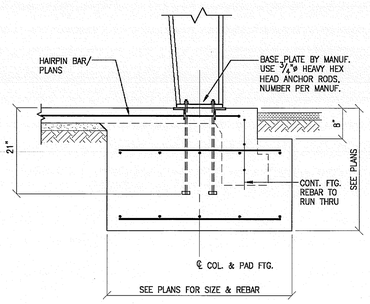

FOOTING DETAIL | 3

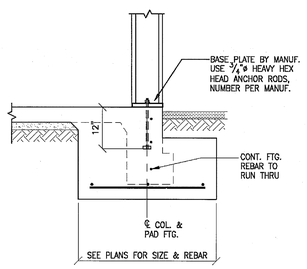

FOOTING DETAIL | 4

GENERAL NOTES

REINFORCING STEEL

1. Reinforcing steel shall conform to ASTM A615, Grade 40 for sizes #3 & #4 and Grade 60 for sizes #5 and larger. Maximum yield shall not exceed 1.3 times that specified.
2. Welding of reinforcing steel shall conform to AWS D12-1 using proper low hydrogen electrodes. All bars to be welded shall conform to ASTM A706.
3. All bars in concrete shall be lapped a minimum of 48 bar diameters (2'-0" min.) for Grade 40 and 72 bar diameters (2'-6" min.) for Grade 60 at all splices unless noted otherwise.
4. Splices of horizontal rebar in walls and footings shall be staggered 4'-0" minimum.
5. All bending of reinforcing steel shall conform to the latest edition of the California Building Code.

STRUCTURAL STEEL

1. All fabrication and erection shall conform to the latest edition of the AISC Manual of Steel Construction and Chapter 22 of the 2007 California Building Code.
2. All welding shall be done by certified welders.
3. Angles and plates shall conform to ASTM A36.
4. Anchor rods shall conform to ASTM F1554, Grade 36 u.n.o.
5. All welding electrodes shall conform to ASTM A233, E70XX rods. All welding shall be done with low hydrogen electrodes or using a low hydrogen welding process.

DESIGN LOADS:

Roof Lateral, etc.

See Calculations and Drawings by Metal Building Manufacturer

Wind:

Speed (3 sec gust) 85 mph

I 1.0

Occupancy II

Exposure C

Earthquake:

I 1.0

Occupancy II

S_S 1.50

S_1 .60

Site Class C

S_{DS} 1.00

S_{D1} .520

Design Category D

GENERAL

1. All construction and workmanship shall conform to the 2007 California Building Code.
2. These notes shall be used in conjunction with the plans and any discrepancies shall be brought to the attention of the Landscape Architect/Engineer.
3. Contractor must check all dimensions, framing conditions, and site conditions before starting work. Landscape Architect/Engineer shall be notified immediately of any discrepancies or possible deficiencies.
4. Conditions not specifically shown shall be constructed similar to the details for the respective materials.
5. The drawings and specifications represent the finished structure. All bracing, temporary supports, shoring, etc. is the sole responsibility of the contractor. Observation visits to the job site by the Landscape Architect/Engineer do not include inspection of construction procedures. The contractor is solely responsible for all construction methods and conditions at the worksite. These visits will not be construed as continuous and detailed inspections.
6. Design, material, equipment, and products other than those described below or indicated on the drawings may be considered for use, provided prior approval is obtained from the Owner, Lanscape Architect/Engineer, and the applicable governing code authority.
7. All conditions noted as existing are based on the best information currently available at the time of preparation of these drawings. The Contractor is to verify all conditions before starting work. Should conditions arise which are different from those shown on the drawings, the Landscape Architect/Engineer shall be notified immediately and additional drawings based on more accurate information will be prepared.

TESTS AND INSPECTIONS

1. Continuous inspection by a registered deputy inspector is required for all field welding, high strength bolting, concrete with a strength greater than 2500 psi. The extent of such inspection shall conform to Chapter 17 of the California Building Code. An affidavit shall be issued to the Landscape Architect/Engineer and the Building Department at the completion of each type of work stating whether the work was in conformance with the approved plans and specifications. Concrete inspection may be limited to slump tests, compression tests, and inspection of placed rebar.
2. The following items require inspection by a licensed Deputy Inspector:

ITEM	YES	NO
Concrete	✓ (Anchor Bolts)	✓
Structural Steel	✓ (Field Welding, High Strength Bolting)	✓

FOUNDATIONS

1. All existing fill soil and disturbed natural soils are to be excavated and replaced with properly compacted fill. All filling, backfilling, recompaction, etc. is to be accomplished only under the supervision of a soils engineer.
2. All excavations are to be inspected and approved by a Soils Engineer prior to the placement of any concrete or reinforcing steel.
3. Footings are to be carried a minimum of 12" into firm undisturbed natural soil or approved compacted fill.
4. Design bearing pressure is 2500 psf with a 33% increase for seismic or wind loading.
5. Relatively non-expansive fill should be used in backfilling behind walls. All walls shall be adequately shored during the backfill operation.
6. All excavations, grading, compaction, etc. shall be accomplished and performed in accordance with the Soils Report as prepared by Converse Consultnats, Project No. 07-81-368-01 dated October 30, 2008 .

This Soils Report and addendum is hereby made a part of these General Notes and all recommendations contained therein shall be considered as minimums.

CONCRETE

1. Unless noted otherwise, all concrete shall attain a minimum compressive strength of 2500 psi at 28 days.
2. Aggregates shall be natural sand and rock conforming to ASTM C33. For exposed walls and slab, use approximately equal percentage of (>3/8"), intermediate (<3/8", >#8) and fine aggregate (<#8).
3. Cement shall be Portland Cement conforming to ASTM C-150, Type II/V, low alkali.
4. Water shall be potable, clean and free from injurious amounts of oils, acids, alkalis, salts, organic materials, or other substances that may be deleterious to concrete or reinforcement.
5. Admixtures to be used in concrete shall be subject to prior approval by the Engineer.
6. Maximum permissible water-cement ratios for concrete shall conform to Table 4.2.2 and 4.3.1. of ACI 318-05. Maximum slump shall be 4 inches for slabs, and 5 inches for footings.
7. Concrete shall be cured while in a moist condition for at least the first 7 days after placement. Methods for accelerated curing shall have prior approval of the Engineer.
8. The following minimum clear distances between reinforcing steel and face of concrete shall be maintained unless noted otherwise:

   Slabs on grade ..... Center of slab
   Concrete below grade, formed ..... 2"
   Concrete below grade, unformed (poured against earth).....3"
   Concrete exposed to weather.....1 1/2"
9. Pipes may pass through structural concrete in sleeves, but shall not be embedded therein. Pipes or ducts exceeding one-third the slab or wall thickness shall not be placed in the structural concrete unless specifically detailed.
10. Provide 3/4" chamfers at all exposed corners.
11. Refer to landscape architectural drawings for reveals, areas of textured concrete or special finishes, items required to be cast into concrete, curbs and slab depressions.
12. All concrete shall be vibrated.

MOORE IACOFANO GOLTSMAN, INC.
801 N. HARBOR BLVD.
FULLERTON, CA 92831
TEL 714/871-3538
FAX 714/871-1188
www.migcom.com

CONSULTANT:

CORREIA CONSULTING & DESIGN
STRUCTURAL ENGINEERS
16912 bolsa chica road, suite 101
huntington beach, ca 92649
714 840-5582

PROJECT TEAM:

LANDSCAPE ARCHITECT
MOORE IACOFANO GOLTSMAN, INC.

ARCHITECT
PITASSI ARCHITECTS INC.

CIVIL ENGINEERS/SURVEYOR
WALDEN & ASSOCIATES

STRUCTURAL ENGINEERS
CORREIA CONSULTING & DESIGN

ELECTRICAL ENGINEERS
LRA ENGINEERS

IRRIGATION DESIGNER
WILLIAMS IRRIGATION DESIGN

GEOTECHNICAL ENGINEERS
CONVERSE CONSULTANTS

TURF GRASS CONSULTANT
GUISE AND ASSOCIATES

PERRIS VALLEY Big League Dreams

2155 Trumble Road
Perris, California, 92570

SHEET TITLE

SOCCER FIELD

100% CONSTRUCTION DOCUMENT

DATE	REVISIONS

STAMP

REGISTERED PROFESSIONAL ENGINEER
WILLIAM J. CORREIA
No. 2132
Exp.12/31/09
STRUCTURAL
STATE OF CALIFORNIA

(08047)

CHECKED BY	DATE
XX	07/30/09
DATE 7-30-09	FILE NAME
DRAWN BY STAFF	SHEET SS-1
JOB NO. 05208.00	OF 311 SHEETS
SCALE 1:20	