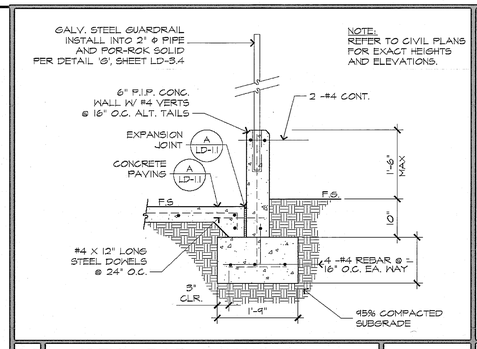

M | 6" THK. P.I.P. CONC. WALL | NO SCALE

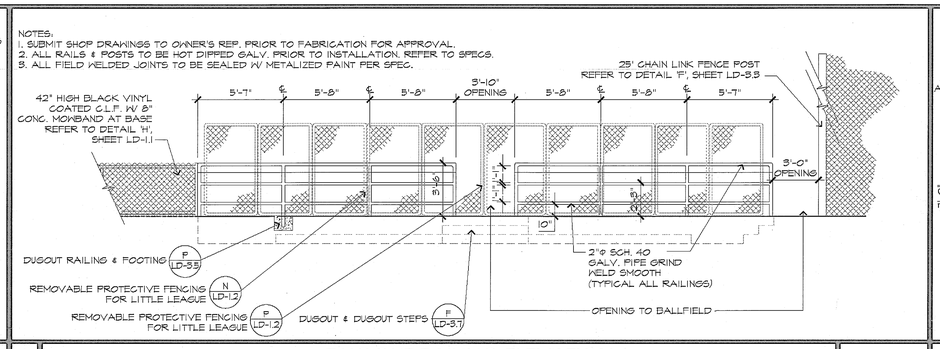

I | DUGOUT RAILING ELEVATION | NO SCALE

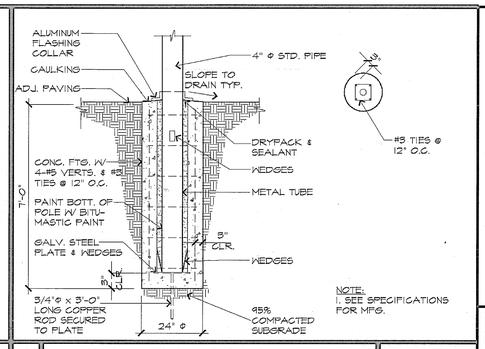

A | FLAG POLE | NO SCALE

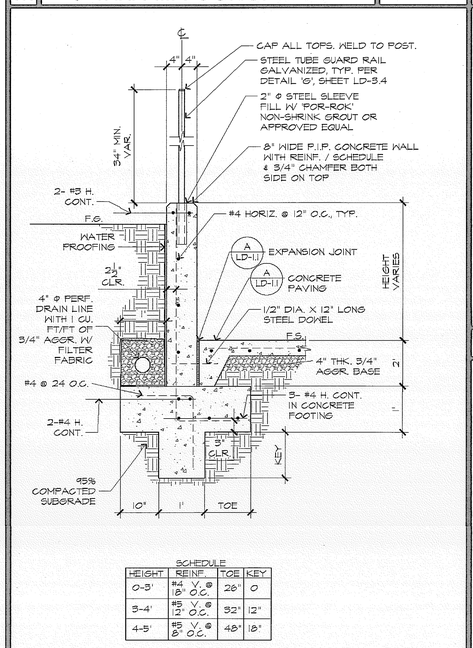

SCHEDULE

HEIGHT	REINF.	TOE	KEY
0-3'	#4 V. @ 18" O.C.	28"	0
3-4'	#5 V. @ 12" O.C.	32"	12"
4-5'	#5 V. @ 8" O.C.	48"	18"

O | P.I.P. CONCRETE RET. WALL | NO SCALE

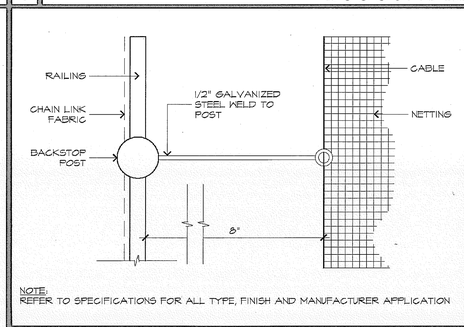

NOTE:
REFER TO SPECIFICATIONS FOR ALL TYPE, FINISH AND MANUFACTURER APPLICATION

J | EYE BOLT & POST CONNECTION | NO SCALE

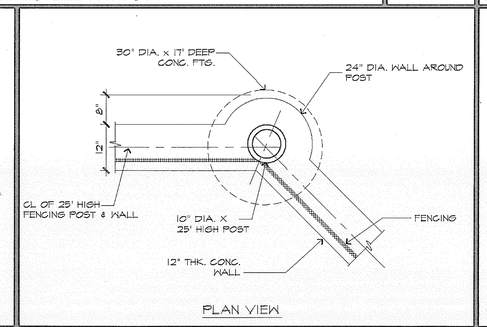

F | 25' POST @ BACKSTOP | NO SCALE

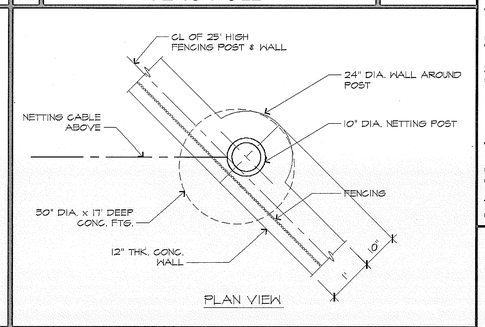

B | 27' HIGH POST @ BACKSTOP | NO SCALE

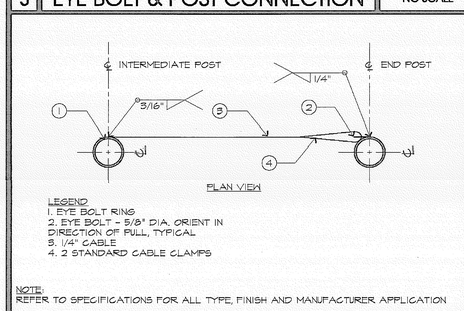

LEGEND
1. EYE BOLT RING
2. EYE BOLT - 5/8" DIA. ORIENT IN DIRECTION OF PULL, TYPICAL
3. 1/4" CABLE
4. 2 STANDARD CABLE CLAMPS

NOTE:
REFER TO SPECIFICATIONS FOR ALL TYPE, FINISH AND MANUFACTURER APPLICATION

K | CABLE TO POST CONNECTION | NO SCALE

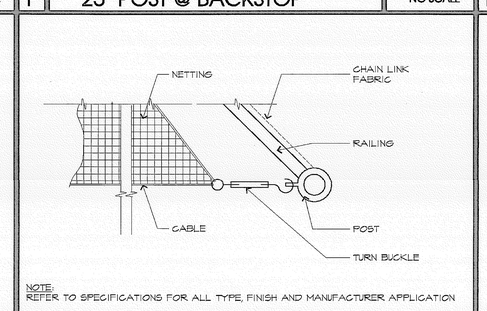

NOTE:
REFER TO SPECIFICATIONS FOR ALL TYPE, FINISH AND MANUFACTURER APPLICATION

G | EYE BOLT & CABLE CONNECTION | NO SCALE

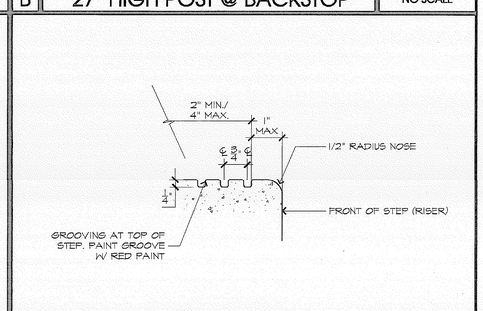

C | GROOVES @ STEPS | NO SCALE

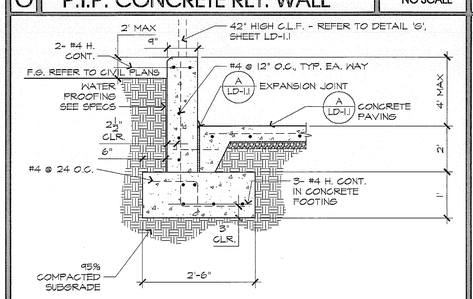

P | P.I.P. CONC. WALL @ WALKWAY | NO SCALE

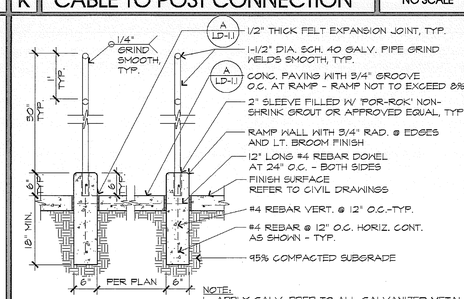

NOTE:
1. APPLY GALV. PREP TO ALL GALVANIZED METAL RAILS

L | ADA ACCESS RAMP | NO SCALE

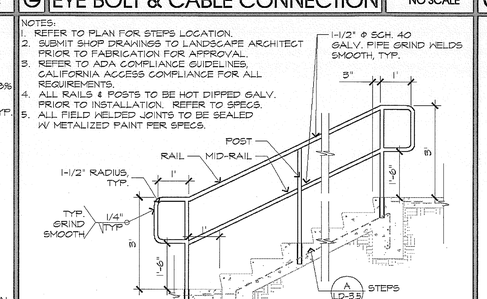

H | HANDRAIL @ CONC. STEPS | NO SCALE

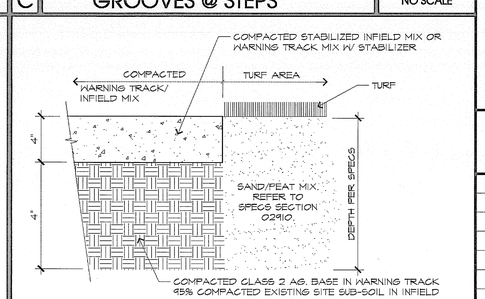

NOTE:
1. REFER TO SPECIFICATIONS FOR ALL TYPE, COLOR AND MANUFACTURER APPLICATIONS
2. SEE CONSTRUCTION CALLOUT PLANS FOR LOCATIONS.

D | INFIELD/WARNING TRACK MIX | NO SCALE

MIG

MOORE IACOFANO GOLTSMAN, INC.
801 N. HARBOR BLVD.
FULLERTON, CA 92832
TEL 714/871-3658
FAX 714/871-1188
www.migcom.com

CONSULTANT:

PROJECT TEAM:
LANDSCAPE ARCHITECT
MIG INC.

ARCHITECT
PITASSI ARCHITECTS INC.

CIVIL ENGINEERS/SURVEYOR
WALDEN & ASSOCIATES

STRUCTURAL ENGINEERS
CORREIA CONSULTING & DESIGN

ELECTRICAL ENGINEERS
LRA ENGINEERS

IRRIGATION DESIGNER
WILLIAMS IRRIGATION DESIGN

GEOTECHNICAL ENGINEERS
CONVERSE CONSULTANTS

TURF GRASS CONSULTANT
GUISE AND ASSOCIATES

PERRIS VALLEY Big League Dreams

2155 Trumble Road
Perris, California, 92570

SHEET TITLE
BALLFIELD STADIUM DETAILS

100% CONSTRUCTION DOCUMENT

DATE	REVISIONS

STAMP

CHECKED BY	DATE
RE	
DATE 01-07-10	FILE NAME
DRAWN BY HD	SHEET LD-3.3
JOB NO. 05208.00	
SCALE AS NOTED	225 OF 313 SHEETS