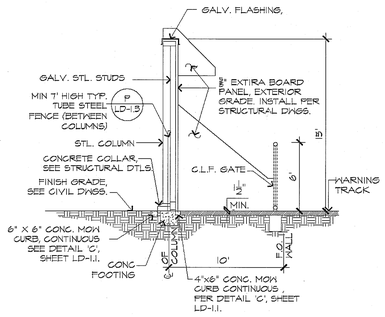

E | OUTFIELD FENCING- SECTION E | NO SCALE

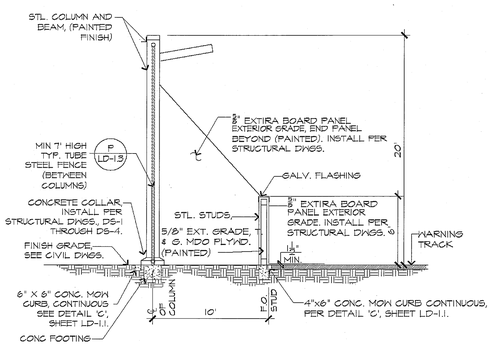

C | OUTFIELD FENCING- SECTION C | NO SCALE

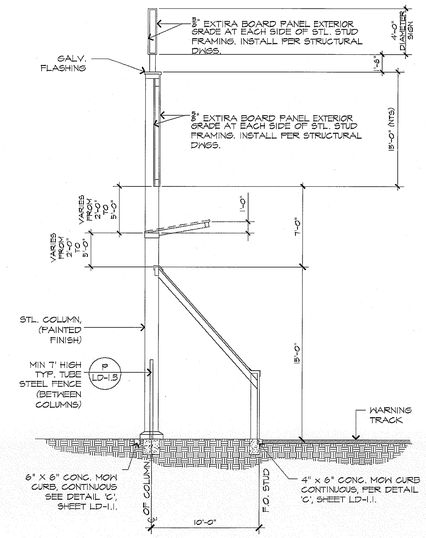

A | OUTFIELD FENCING- SECTION A | NO SCALE

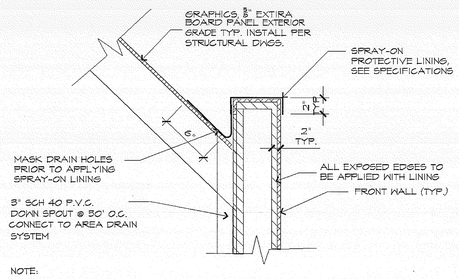

NOTE:
1. SPRAY-ON LINING SHALL MATCH COLOR OF OUTFIELD WALL, PER EACH FIELD, CONTRACTOR TO COORDINATE ACCORDINGLY.
2. ALL END OR EXPOSED EDGE CONDITIONS SHALL HAVE LINING APPLIED.

F | FLASHING/ DRAIN DETAIL | NO SCALE

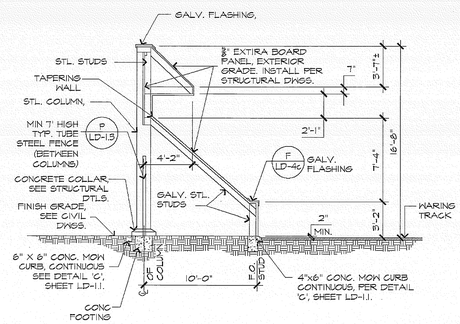

D | OUTFIELD FENCING- SECTION D | NO SCALE

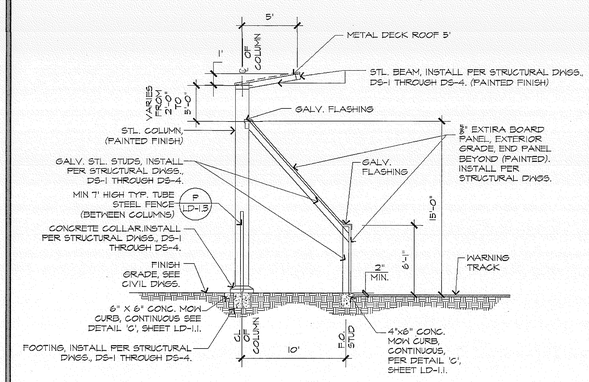

B | OUTFIELD FENCING- SECTION B | NO SCALE

MIG

MOORE IACOFANO GOLTSMAN, INC.

801 N. HARBOR BLVD.
FULLERTON, CA 92832

TEL 714/871-3638
FAX 714/871-1188
www.migcom.com

CONSULTANT:

PROJECT TEAM:

LANDSCAPE ARCHITECT
MIG INC.

ARCHITECT
PITASSI ARCHITECTS INC.

CIVIL ENGINEERS/SURVEYOR
WALDEN & ASSOCIATES

STRUCTURAL ENGINEERS
CORREIA CONSULTING & DESIGN

ELECTRICAL ENGINEERS
LRA ENGINEERS

IRRIGATION DESIGNER
WILLIAMS IRRIGATION DESIGN

GEOTECHNICAL ENGINEERS
CONVERSE CONSULTANTS

TURF GRASS CONSULTANT
GUISE AND ASSOCIATES

PERRIS VALLEY Big League Dreams

2155 Trumble Road
Perris, California, 92570

SHEET TITLE

DODGER STADIUM DETAILS

100% CONSTRUCTION DOCUMENT

DATE	REVISIONS

STAMP

CHECKED BY	DATE
RE	

DATE	FILE NAME
01-07-10	

DRAWN BY: HD

JOB NO.: 05208.00

SCALE: AS NOTED

SHEET: LD-4.2c

242 OF 313 SHEETS