SYMBOLS AND PLANTING LEGEND:

SYMBOL	BOTANICAL NAME	COMMON NAME	SIZE	SPACING
TREES:				
	CEDRUS DEODARA	DEODAR CEDAR	36" BOX	PER PLAN
	PISTACIA CHINENSIS	CHINESE PISTACHE	24" BOX	PER PLAN
	QUERCUS ILEX	HOLLY OAK	24" BOX	PER PLAN
	PLATANUS X ACERIFOLIA 'COLUMBIA'	COLUMBIA LONDON PLANE TREE	24" BOX	PER PLAN
	GINKGO BILOBA 'FAIRMONT'	MAIDENHAIR TREE	36" BOX	PER PLAN
	OLEA EUROPAEA 'SWAN HILL'	OLIVE TREE 'FRUITLESS'	54" MULTI BOX	PER PLAN
	CERCIS OCCIDENTALIS	WESTERN REDBUD	36" BOX	PER PLAN
	LIQUIDAMBAR STYRACIFLUA HARD	'CHEROKEE' SWEETGUM	36" BOX	PER PLAN
	PODOCARPUS GRACILIOR	FERN PINE	24" BOX	PER PLAN
SHRUBS:				
	PRUNUS CAROLINIANA 'BRIGHT 'N TIGHT'	'BRIGHT 'N TIGHT' CAROLINA CHERRY LAUREL	24 BOX	PER PLAN
	CORDIA PARVIFOLIA	LITTLE LEAF CORDIA	15 GAL	PER PLAN
VINES:				
	PANDOREA JASMINOIDES	BOWER VINE	5 GAL.	PER PLAN
GROUNDCOVER:				
	MYOPORUM PACIFICUM	MYOPORUM	1 GAL.	24"
	LEUCOPHYLLUM FRUTESCENS	TEXAS RANGER	5 GAL	3' O.C. (MONROVIA)
	COBBLE	REFER TO SHEET LM-1		
	DECOMPOSED GRANITE	REFER TO SHEET LM-1		
TURF:				
	HYBRID BERMUDA	TIFWAY 419	SOD	
	COMMON AREA TURF	WEST COASTER - FESCUE	HYDROSEED	
FIELD SURFACING:				
	PRO-SOLD INFIELD MIX WITH STABILIZER	REFER TO SHEET LM-1		
	PRO-SOLD WARNING TRACK MIX WITH STABILIZER	REFER TO SHEET LM-1		
VEGETATED SWALE:				
	VEGETATED SWALE PLANTING MIX	REFER TO SPECS		
	ROCK OUTCROPPINGS	REFER TO SPECS		

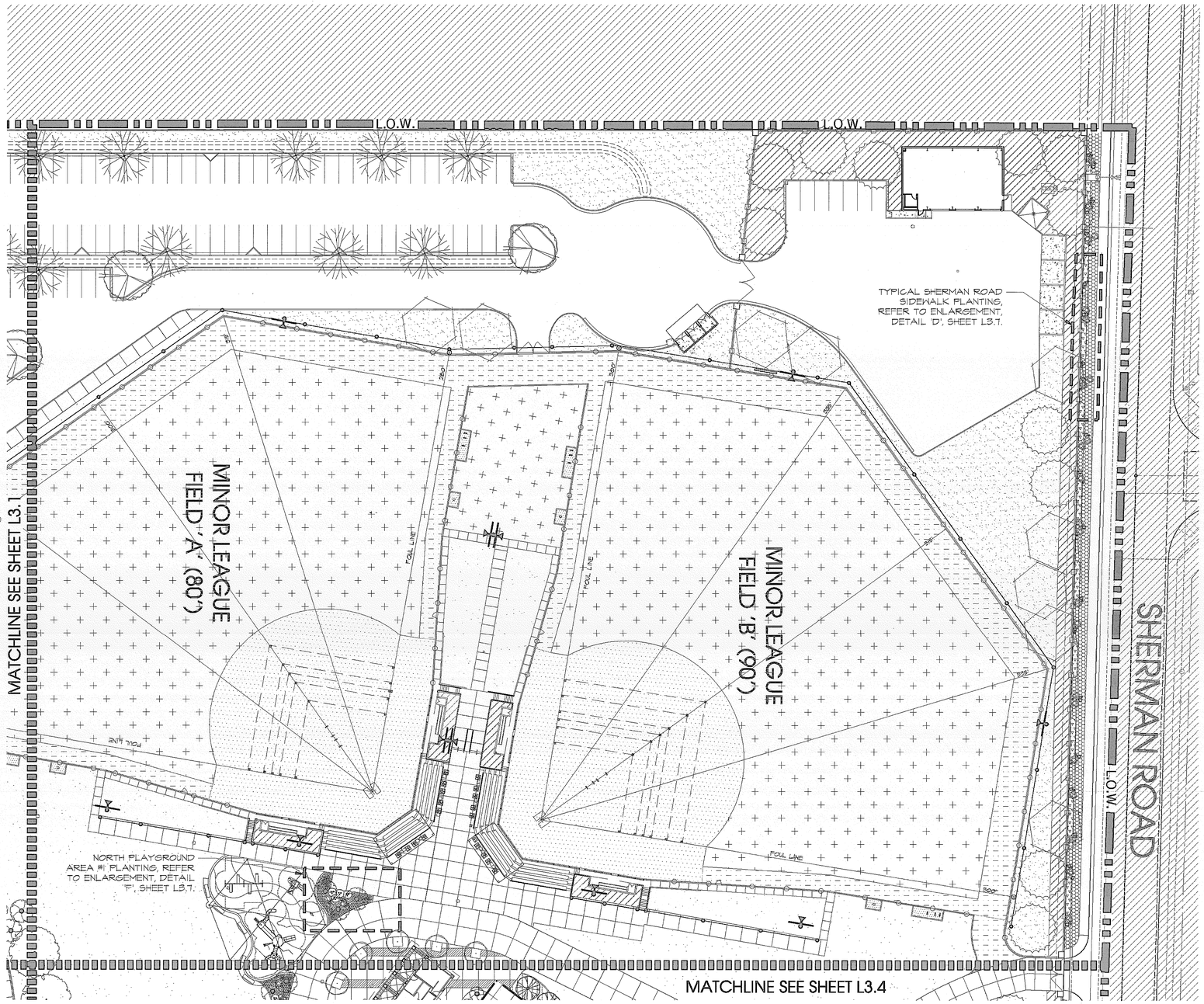

PLANTING NOTES:

1. CONTRACTOR SHALL NOTIFY THE AGENCY OF SITE CONDITIONS WHICH PREVENT INSTALLATION PER PLANS AND SPECIFICATIONS.
2. CONTRACTOR SHALL BE LIABLE FOR REMOVING AND REINSTALLING IRRIGATION EQUIPMENT, AND REPLANTING AREAS WHICH ARE NOT INSTALLED PER PLAN AND SPECIFICATIONS.
3. IRRIGATION SYSTEM SHALL BE INSTALLED PRIOR TO PLANT MATERIALS.
4. TREES AND SHRUBS SHALL BE PLANTED AFTER CONCRETE PLACEMENT, BUT NOT BEFORE IRRIGATION COVERAGE TEST HAS BEEN APPROVED. (SEE SPECIFICATIONS).
5. PLACE TREES BETWEEN IRRIGATION HEADS WHEREVER POSSIBLE.
6. SHREDDED MULCH INSTALLATION: INSTALL SHREDDED MULCH IN ALL SHRUB AND GROUNDCOVER AREAS AT A DEPTH OF 2".
7. CONTRACTOR IS RESPONSIBLE FOR ALL REPAIRS AND/OR REPLACEMENT OF ANY DAMAGED LANDSCAPE AREAS BEYOND THE LIMIT OF WORK, THAT IS A DIRECT RESULT OF THE LANDSCAPE CONSTRUCTION AND/OR HIS SUB-CONTRACTOR. REPLACEMENT ITEMS SHALL BE EXACT DUPLICATE OF ORIGINAL WORK ON PLANS, UNLESS OTHERWISE APPROVED BY THE AGENCY AUTHORIZED REPRESENTATIVE.
8. CLEANUP SHALL TAKE PLACE ON A DAILY BASIS UNLESS OTHERWISE APPROVED BY THE AGENCY'S REPRESENTATIVE.
9. THE PLANTING PLANS ARE ONLY ACCURATE FOR PLANTING LOCATION AND QUANTITIES. THE CONTRACTOR SHALL VERIFY ALL QUANTITIES BY PLAN CHECK. THE PLANTING LEGEND IS ACCURATE ONLY FOR PLANT SIZE.
10. PLANTS LABELED "MONROVIA" ARE AVAILABLE THROUGH MONROVIA GROWERS (800)999-9521

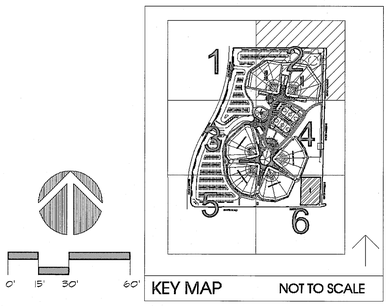

MIG
MOORE IACOFANO GOLTSMAN, INC.
801 N. HARBOR BLVD.
FULLERTON, CA 92832
TEL 714/871-3638
FAX 714/871-1188
www.migcom.com

CONSULTANT:

PROJECT TEAM:
LANDSCAPE ARCHITECT
MIG INC.

ARCHITECT
PITASSI ARCHITECTS INC.

CIVIL ENGINEERS/SURVEYOR
WALDEN & ASSOCIATES

STRUCTURAL ENGINEERS
CORREIA CONSULTING & DESIGN

ELECTRICAL ENGINEERS
LRA ENGINEERS

IRRIGATION DESIGNER
WILLIAMS IRRIGATION DESIGN

GEOTECHNICAL ENGINEERS
CONVERSE CONSULTANTS

TURF GRASS CONSULTANT
GUISE AND ASSOCIATES

PERRIS VALLEY Big League Dreams

2155 Trumble Road
Perris, California, 92570

SHEET TITLE

PLANTING PLAN

100% CONSTRUCTION DOCUMENT

DATE	REVISIONS

STAMP

CHECKED BY	DATE
RE	
DATE 01-07-10	FILE NAME
DRAWN BY HD	SHEET L3.2
JOB NO. 05208.00	
SCALE 1"=30'-0"	203 OF 313 SHEETS