CONSTRUCTION LEGEND:

(1) ADMINISTRATION BUILDING, REFER TO ARCHITECTURAL PLANS.
(2) STADIUM CLUB, REFER TO ARCHITECTURAL PLANS.
(3) CONCESSION BUILDING, REFER TO ARCHITECTURAL PLANS.
(4) MAINTENANCE BLDG, REFER TO ARCHITECTURAL PLANS
(5) COVERED SOCCER STRUCTURE. REFER TO SHEETS LD-5.1 THROUGH LD-5.3.
(6) DRIVE APRON. REFER TO CIVIL PLANS.
(7) BATTING CAGE, REFER TO LANDSCAPE ARCHITECTURAL PLAN, SHEETS LD-2.1 THROUGH LD-2.6.
(8) 4" THK. CONCRETE PAVING, REFER TO DETAIL 'A', SHEET LD-1.1. REFER TO MATERIALS LIST SHEET LM-1&2, CONCRETE #1 FOR ADDITIONAL INFO. FINISH: MED. BROOM FINISH.
(9) 6" THK. CONCRETE PAVING BAND, REFER TO DETAIL 'B', SHEET LD-1.1. REFER TO MATERIALS LIST SHEET LM-1&2, CONCRETE #2 FOR ADDITIONAL INFO. FINISH: MEDIUM SAND BLAST FINISH.
(10) 6" CONCRETE PAVING, REFER TO DETAIL 'B', SHEET LD-1.1. REFER TO MATERIALS LIST SHEET LM-1&2, CONCRETE #3 FOR ADDITIONAL INFO. FINISH: MED. BROOM FINISH.
(11) 4" THK. COLORED CONCRETE - REFER TO DETAIL 'A', SHEET LD-1.1. REFER TO MATERIALS LIST SHEET LM-1&2, CONCRETE #4 FOR ADDITIONAL INFO. FINISH: MEDIUM SAND BLAST FINISH.
(12) 6" THK. CONCRETE MOWBAND, REFER TO DETAIL 'C', SHEET LD-1.1.
(13) 7' HIGH ORNAMENTAL STEEL SINGLE GATE W/ KNOX BOX MODEL 3200 SERIES & KNOX PAD LOCK. MOUNT TO STATIONARY POST AS RECOMMENDED BY MFG. COLOR: BLACK. REFER TO DETAL 'D', SHEET LD-1.3.
(14) ORNAMENTAL STEEL FENCE WITH CONTINUOUS 12" MOWBAND. REFER TO DETAIL 'N', SHEET LD-1.3 & 12" MOWBAND DETAIL 'E', SHEET LD-1.1.
(15) ORNAMENTAL STEEL FENCING AT ADMIN. BUILDING, REFER TO DETAIL 'N', SHEET LD-1.3.
(16) PEDESTRIAN ENTRY GATES. REFER TO ARCHITECTURAL SHEETS.
(17) TUBULAR STEEL VEHICULAR GATE, REFER TO DETAIL 'L', SHEET LD-1.2.
(18) DECORATIVE ENTRY WALL, REFER TO DETAIL 'K', SHEET LD-1.2.
(19) 42" HIGH CHAIN LINK GATE, REFER TO DETAIL 'P', SHEET LD-1.1. REFER TO SPECIFICATIONS.
(20) 42" HIGH CHAIN LINK FENCE WITH FENCE CAP AND 9" CONTINUOUS MOWBAND, REFER TO BASEBALL DIAMOND ENLARGEMENT, DETAIL 'A', SHEET LD-3.6, CLF DETAIL 'H', SHEET LD-1.1 AND 9" MOWBAND DETAIL 'D', SHEET LD-1.1. REFER TO SPECIFICATIONS.
(21) 42" CHAIN LINK FENCE WITH WITH FENCE CAP & POURED IN PLACE CONCRETE WALL, REFER TO DETAIL 'P', SHEET LD-3.3.
(22) PLANTING DIAMOND, REFER TO DETAIL 'H', SHEET LD-6.1.
(23) 7' HIGH ORNAMENTAL STEEL MAINTENANCE GATE, REFER TO DETAIL 'M', SHEET LD-1.3.
(24) 7' HIGH ORNAMENTAL STEEL DOUBLE GATE, REFER TO DETAIL 'H', SHEET LD-1.3.
(25) 10' HIGH CHAIN LINK FENCE (CLF) WITH FENCE CAP, 12" CONTINUOUS MOWBAND AND WINDSCREEN, REFER TO CLF DETAIL 'H', SHEET LD-1.1 & 12" MOWBAND DETAIL 'E', SHEET LD-1.1.
(26) GUTTERS AND/OR 6" CURBS, REFER TO CIVIL DRAWINGS.
(27) CONCRETE WHEEL STOP. REFER TO CIVIL PLANS.
(28) PARKING STRIPING, 9' x 19', TYP. REFER TO CIVIL PLANS.
(29) ADA PARKING, REFER TO CIVIL DRAWINGS.
(30) ADA PARKING SIGNAGE, REFER TO CIVIL DRAWINGS.
(31) ADA VAN PARKING, REFER TO CIVIL DRAWINGS.
(32) ADA ACCESS RAMP. REFER TO CIVIL DRAWINGS.
(33) CROSSWALK, REFER TO CIVIL DRAWINGS.
(34) 20' HIGH SAFETY NETTING. REFER TO DETAIL 'A', SHEET LD-1.2.
(35) 70' HIGH SAFETY NETTING AT PERIMETER OF BLD PARK AND FIELDS. REFER TO DETAIL 'F', SHEET LD-1.2.
(36) 6' HIGH CMU BLOCK MATERIAL STALLS, REFER TO DETAIL 'M', SHEET LD-1.2.
(37) 10' X 20' CONCRETE PAD FOR PUMP STATION. REFER TO DETAIL 'B', SHEET LD-1.1. COLOR: NATURAL GRAY, FINISH: MED. BROOM. CONTRACTOR TO COORDINATE WITH PUMP MANUFACTURER FOR INSTALLATION PROCEDURES & REQUIREMENTS. REFER TO IRRIGATION DRAWINGS.
(38) DECORATIVE ENTRY PAVING. REFER TO DETAIL 'H', SHEET LD-1.4.
(39) CMU WALL W/ VINE TRELLIS, REFER TO DETAIL 'F', SHEET LD-1.3.
(40) EXIT TURNSTILE LAYOUT, REFER TO ARCHITECTURAL DRAWINGS.
(41) CONCRETE RAMP AT TOT LOT AREA #2, RAMP NOT TO EXCEED 5%. REFER TO DETAIL 'E', SHEET LD-1.7.
(42) 2-5 & 5-12 YEAR OLD TOT LOT AREA #1 PLAY EQUIPMENT & SHADE SHELTER, REFER TO DETAIL 'N', SHEET LD-1.4. REFER TO MATERIALS LIST SHEET LM-1&2 FOR MFG.
(43) 2-5 & 5-12 YEAR OLD TOT LOT AREA #2 PLAY EQUIPMENT & SHADE SHELTER, REFER TO DETAIL 'F', SHEET LD-1.4. REFER TO SPECIFICATIONS.
(44) DRINKING FOUNTAIN SUMP, REFER TO DETAIL 'K', SHEET LD-1.1.
(45) FLAG POLES. REFER TO MATERIALS LIST SHEET LM-1&2.
(46) BALLFIELD SCOREBOARD. REFER TO MATERIALS LIST SHEET LM-1&2.
(47) SOCCER ARENA BLEACHERS. REFER TO DETAIL 'A', SHEET LD-5.1
(48) CLUSTERED BOULDERS, REFER TO DETAIL 'H', SHEET LD-1.5.
(49) BICYCLE RACKS. REFER TO MATERIALS LIST SHEET LM-1&2.
(50) 6" CONCRETE MOWBAND, WITH DEPRESSION. REFER TO DETAIL 'I', SHEET LD-1.7.
(51) TRASH RECEPTACLE. REFER TO MATERIALS LIST SHEET LM-1&2.
(52) 8' LONG BENCH W/ BACKREST. REFER TO MATERIALS LIST SHEET LM-1 & LM-2.
(53) A.C. PAVING. SEE CIVIL DRAWINGS.
(54) ¾"-1" MINUS CRUSH GRAVEL UNDER ENTIRE REPLICA WALLS. PROVIDE MIRAFI LANDSCAPE FABRIC UNDER GRAVEL. SUBMIT SAMPLE OF GRAVEL & FABRIC TO LANDSCAPE ARCHITECT FOR APPROVAL.
(55) DECOMPOSED GRANITE - REFER TO DETAIL 'O', SHEET LD-1.1.
(56) 30' FOUL BALL POLE, REFER TO DETAIL 'D', SHEET LD-3.5. REFER TO MATERIALS LIST SHEET LM-1&2.
(57) BASEBALL DIAMOND ENLARGEMENT, REFER TO DETAIL 'A', SHEET LD-3.6.
(58) STADIUM BLEACHERS, REFER TO DETAIL 'N' & 'F', SHEET LD-3.4.
(59) YANKEE STADIUM REPLICA WALL, SHEET LD-4.1a THROUGH LD-4.1d.
(60) DODGER STADIUM REPLICA WALL, SHEET LD-4.2a THROUGH LD-4.2c.
(61) FENWAY PARK REPLICA WALL, SHEET LD-4.3a THROUGH LD-4.3d.
(62) ANGEL STADIUM REPLICA WALL, SHEET LD-4.4a THROUGH LD-4.4d.
(63) BACKSTOP, REFER TO DETAIL 'E', SHEET LD-3.5.
(64) REPLICA FIELD DUGOUT, REFER TO DETAIL 'F', SHEET LD-3.7.
(65) BALLFIELD TURF.
(66) GENERAL TURF AREA.
(67) PLANTED AREA.
(68) PARKING LOT VEGETATED SWALE.
(69) P.I.P. CONCRETE WALL AT WALK TO DUGOUT - REFER TO DETAIL 'P', SHEET LD-3.3.
(70) SPORTS FIELD LIGHTING POLES, REFER TO ELECTRICAL PLANS.
(71) ELECTRICAL TRANSFORMER & SWITCH GEAR, REFER TO ELECTRICAL PLANS.
(72) MONUMENT SIGNAGE, REFER TO DETAIL 'G', SHEET LD-1.5.
(73) TREE GRATE, REFER TO DETAIL A', SHEET LD-6.1 & SHEET LM-1&2.
(74) PRO-GOLD STABILIZED INFIELD MIX, REFER TO DETAIL 'D', SHEET LD-3.3.
(75) PRO-GOLD STABILIZED WARNING TRACK MIX, REFER TO DETAIL 'D', SHEET LD-3.3.
(76) IRRIGATION PUMP STATION & 6" CONC. PAD. REFER TO IRRIGATION PLANS
(77) EXISTING SIDEWALK & STREET IMPROVEMENT MODIFICATIONS. IMPROVEMENTS SHALL BE MADE WITHIN R.O.W. LIMITS. CONCRETE BOXES SHALL BE USED FOR ALL UTILITIES, INCLUDING ELECTRICAL, SEWER, WATER & IRRIGATION.
(78) 54" DIAMETER DECORATIVE CONCRETE BASEBALL. REFER TO SHEET LM-1&2.
(79) 7' HIGH MIN. ORNAMENTAL STEEL FENCE UNDER REPLICA WALL W/ 6" CONTINUOUS MOWBAND. REFER TO DETAIL 'P', SHEET LD-1.3 FOR FENCE, DETAIL 'C', SHEET LD-1.1 FOR MOWBAND.
(80) MISTING SYSTEM COMPONENTS. REFER TO DETAILS 'O' & 'P', SHEET LD-1.8.
(81) C.M.U. TRASH ENCLOSURE. REFER TO DETAIL 'P', SHEET LD-1.7.
(82) ADA ACCESS RAMP BETWEEN MINOR LEAGUE FIELDS. REFER TO DETAIL 'J', SHEET LD-3.5.
(83) DECORATIVE PILASTERS. REFER TO DETAIL 'D', SHEET LD-1.2.
(84) ELECTRICAL LIGHT STANDARD REFER TO ELECTRICAL PLANS.
(85) MINOR LEAGUE STADIUM BLEACHERS, REFER TO DETAIL 'P', SHEET LD-3.4.
(86) 10' HIGH CHAIN LINK DOUBLE GATE WITH WINDSCREEN, REFER TO DETAIL 'M', SHEET LD-1.1.
(87) 7' HIGH ORNAMENTAL STEEL SINGLE GATE, REFER TO DETAIL 'D', SHEET LD-1.3.
(88) SITE STEPS, REFER TO DETAIL 'A', SHEET LD-3.5.
(89) CONTINUOUS HEADER BOARD, REFER TO DETAIL 'H', SHEET LD-1.7.
(90) WAY-FINDING SIGN. REFER TO MATERIALS LIST SHEET LM-1&2.
(91) WASHOUT AREA. REFER TO CIVIL DRAWINGS.
(92) 10' HIGH SAFETY NETTING POLE FOR OPENING. REFER TO DETAIL 'A', SHEET LD-1.2.
(93) DRINKING FOUNTAIN, REFER TO DETAIL 'K', SHEET LD-1.1. REFER TO MATERIALS LIST SHEET LM-1&2.
(94) HIGH-LOW DRINKING FOUNTAIN, REFER TO DETAIL 'K', SHEET LD-1.1. REFER TO MATERIALS LIST SHEET LM-1&2.
(95) NON-SKID POROUS RUBBERIZED FIELD GRATE COVER. REFER TO MATERIALS LIST SHEET LM-1 & LM-2. MAT SHALL COVER ENTIRE DRAIN, INCLUDING FRAME.
(96) 40" BRICK BAND PAVING. REFER TO DETAIL 'O', SHEET LD-1.7.
(97) 28" BRICK BAND PAVING. REFER TO DETAIL 'K', SHEET LD-1.7.
(98) 6" THK. CONCRETE PAVING, REFER TO DETAIL 'B', SHEET LD-1.1. REFER TO MATERIALS LIST SHEET LM-1&2, CONCRETE #6 FOR ADDITIONAL INFO. FINISH: MED. BROOM FINISH.
(99) ROCK COBBLE TO MATCH CENTER MEDIAN ON TRUMBLE ROAD (SIZE, COLOR & SHAPE).
(100) MINOR LEAGUE FIELD DUGOUT. REFER TO DETAIL 'N', SHEET LD-3.9
(101) ROCK COBBLE. REFER TO ENLARGEMENT DETAIL 'D', SHEET L3.7. REFER TO MATERIALS LIST LM-1&2.
(102) SITE RETAINING WALL. REFER TO CIVIL PLANS FOR LOCATION.
(103) ACCESS STEPS TO REPLICA DUGOUTS. REFER TO DETAIL 'H' & 'P', SHEET LD-3.7.
(104) SOCCER ARENA FOUNDATION PLAN. REFER TO SHEET LD-5.1 - LD-5.3.
(105) STREET IMPROVEMENT PLANS ON MAPES ROAD & SHERMAN ROAD. REFER TO CIVIL DRAWINGS.
(106) BULLPEN. REFER TO DETAIL 'L', SHEET LD-3.8.
(107) NO RAILING AT THIS LOCATION. SEE DETAIL 'P', SHEET LD-3.2.
(108) 8' HIGH 'TAN' VINYL COATED CHAIN LINK FENCE WITH 3' WIDE X 8' HIGH LOCKING GATE FOR FIRE SPRINKLER RISER. REFER TO CIVIL DRAWINGS FOR FINAL FIRE RISER LOCATION. RISER TO BE COMPLETELY ENCLOSED ALL FOUR SIDES WITH GATE. REFER TO DETAIL 'F', SHEET LD-1.1 FOR FENCE. REFER TO DETAIL 'N', SHEET LD-1.1 FOR GATE.

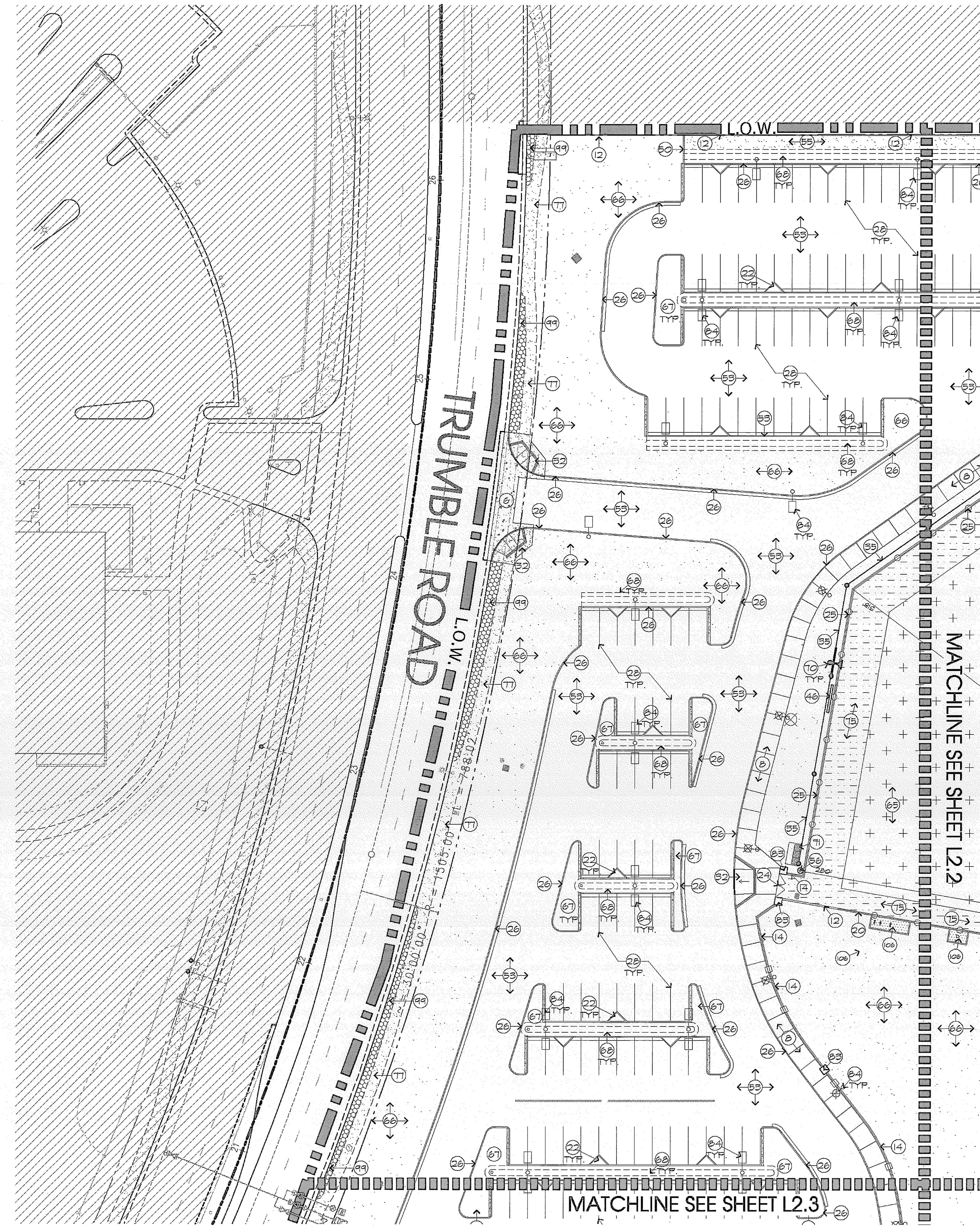

ADDITIVE ALTERNATIVE CONSTRUCTION LEGEND:

[1] RAISED SOCCER STADIUM SEATING WITH SHADE SHELTER, REFER TO SHEET LD-5.2.
[2] BACK OF WALLS AT YANKEE STADIUM & FENWAY PARK. REFER TO SHEETS LD-4.1c & LD-4.3c.
[3] TRI TRUSS CANTILEVERED SHADE STRUCTURE OVER CENTER SECTION OF MINOR LEAGUE FIELD. MFG: SHADE STRUCTURES, CONTACT: PATTI ALBRECHT, 949-466-4592, COLORS SHALL BE DETERMINED BY LANDSCAPE ARCHITECT. REFER TO DETAIL 'C', SHEET LD-1.6.
[4] DECORATIVE PAVING @ ENTRY. REFER TO DETAIL 'F', SHEET LD-1.8.

CONSTRUCTION NOTES:

1. ALL FORMS AND ALIGNMENTS OF PAVING, LAYOUT, AND SPECIAL PAVING AREAS SHALL BE REVIEWED AND APPROVED BY THE OWNER'S AUTHORIZED REPRESENTATIVE PRIOR TO POURING (GIVE A MINIMUM OF 48 HOURS NOTICE.
2. CONTRACTOR SHALL VERIFY LOCATION OF ALL UTILITIES PRIOR TO CONSTRUCTION AND SHALL BE HELD LIABLE FOR ALL DAMAGES INCURRED.
3. CONTRACTOR SHALL NOTE AND INSTALL SLEEVE LOCATIONS SHOWN ON IRRIGATION PLANS IN EXCESS OF EXISTING SLEEVES PER OWNER'S APPROVAL.
4. ALL CONSTRUCTION AND WORKMANSHIP SHALL CONFORM TO THE LATEST EDITION OF THE STANDARD SPECIFICATIONS FOR PUBLIC WORKS.
5. THESE NOTES SHALL BE USED IN CONJUNCTION WITH THE PLANS AND ANY DISCREPANCIES SHALL BE BROUGHT TO THE ATTENTION OF THE LANDSCAPE ARCHITECT AND OWNER'S REPRESENTATIVE.
6. CONTRACTOR MUST CHECK ALL DIMENSIONS, FRAMING CONDITIONS AND SITE CONDITIONS BEFORE STARTING WORK. LANDSCAPE ARCHITECT SHALL BE NOTIFIED IMMEDIATELY OF ANY DISCREPANCIES OR POSSIBLE DEFICIENCIES.
7. CONDITIONS NOT SPECIFICALLY SHOWN SHALL BE CONSTRUCTED SIMILAR TO THE DETAILS FOR THE RESPECTIVE MATERIALS.
8. THE DRAWINGS AND SPECIFICATIONS REPRESENT THE FINISHED WORK. ALL BRACING, TEMPORARY SUPPORTS, SHORING, MASONRY, ETC. IS THE SOLE RESPONSIBILITY OF THE CONTRACTOR. OBSERVATION VISITS TO THE JOB SITE BY THE LANDSCAPE ARCHITECT DOES NOT INCLUDE INSPECTION OF CONSTRUCTION METHODS AND SAFETY CONDITIONS AT THE WORKSITE. THESE VISITS SHALL NOT BE CONSTRUED AS CONTINUOUS AND DETAILED INSPECTIONS.
9. CLEAN-UP SHALL TAKE PLACE ON A DAILY BASIS.
10. REFER TO SPECIFICATIONS FOR ANY ADDITIONAL INFORMATION.
11. EXPANSION JOINTS ARE SHOWN AS DIAGRAMMATIC. CONTRACTOR SHALL VERIFY.

DIGALERT
DIAL TOLL FREE
1-800-422-4133
AT LEAST TWO DAYS BEFORE YOU DIG
UNDERGROUND SERVICE ALERT OF SOUTHERN CALIFORNIA

0' 15' 30' 60'

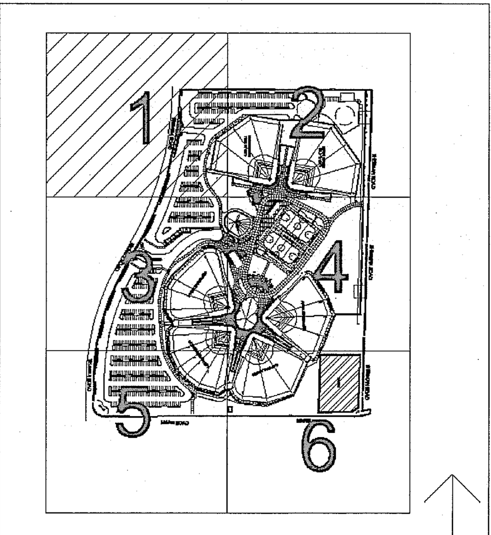

KEY MAP NOT TO SCALE

MOORE IACOFANO GOLTSMAN, INC.
801 N. HARBOR BLVD.
FULLERTON, CA 92832
TEL 714/871-3638
FAX 714/871-1188
www.migcom.com

CONSULTANT:

PROJECT TEAM:

LANDSCAPE ARCHITECT
MIG INC.

ARCHITECT
PITASSI ARCHITECTS INC.

CIVIL ENGINEERS/SURVEYOR
WALDEN & ASSOCIATES

STRUCTURAL ENGINEERS
CORREIA CONSULTING & DESIGN

ELECTRICAL ENGINEERS
LRA ENGINEERS

IRRIGATION DESIGNER
WILLIAMS IRRIGATION DESIGN

GEOTECHNICAL ENGINEERS
CONVERSE CONSULTANTS

TURF GRASS CONSULTANT
GUISE AND ASSOCIATES

PERRIS VALLEY Big League Dreams

2155 Trumble Road
Perris, California, 92570

SHEET TITLE

CALLOUT PLANS

100% CONSTRUCTION DOCUMENT

DATE	REVISIONS

STAMP

LICENSED LANDSCAPE ARCHITECT STEVEN N. LANG NO. 1717 SIGNATURE 11-30-10 RENEWAL DATE 01-07-10 DATE STATE OF CALIFORNIA

CHECKED BY	DATE
RE	

DATE	FILE NAME
01-07-10	
DRAWN BY	SHEET
HD	L2.1
JOB NO.	
05208.00	
SCALE	196 OF 313 SHEETS
1"=30'-0"	