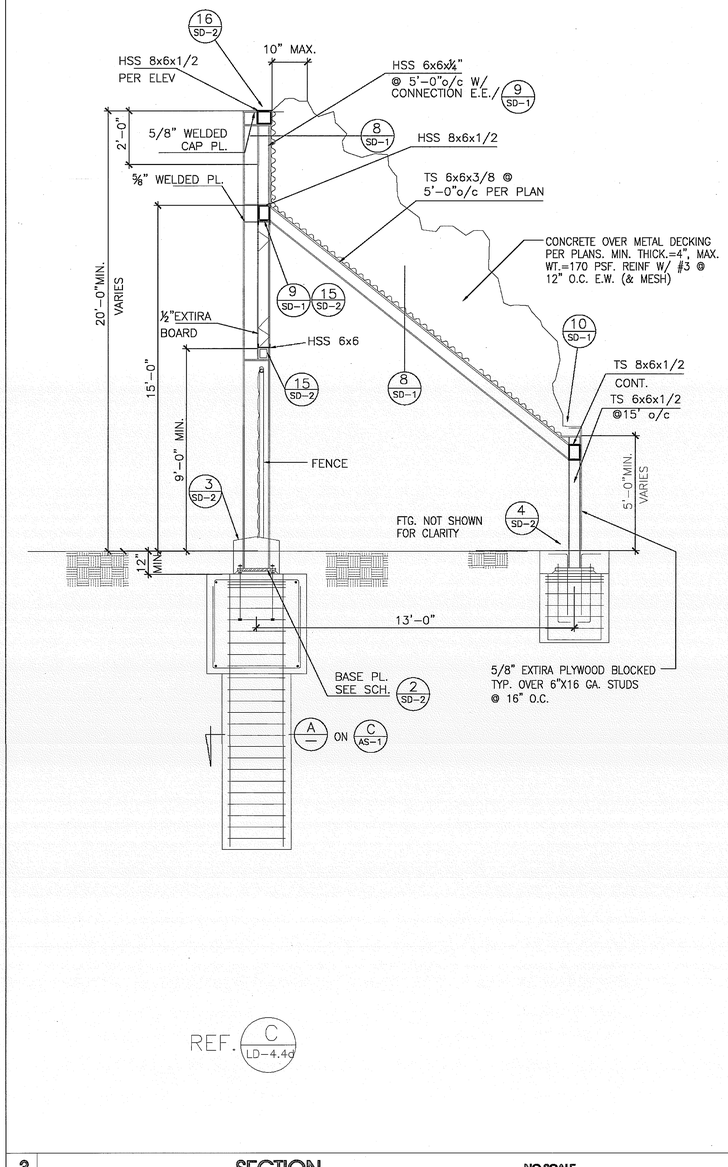

3 SECTION NO SCALE

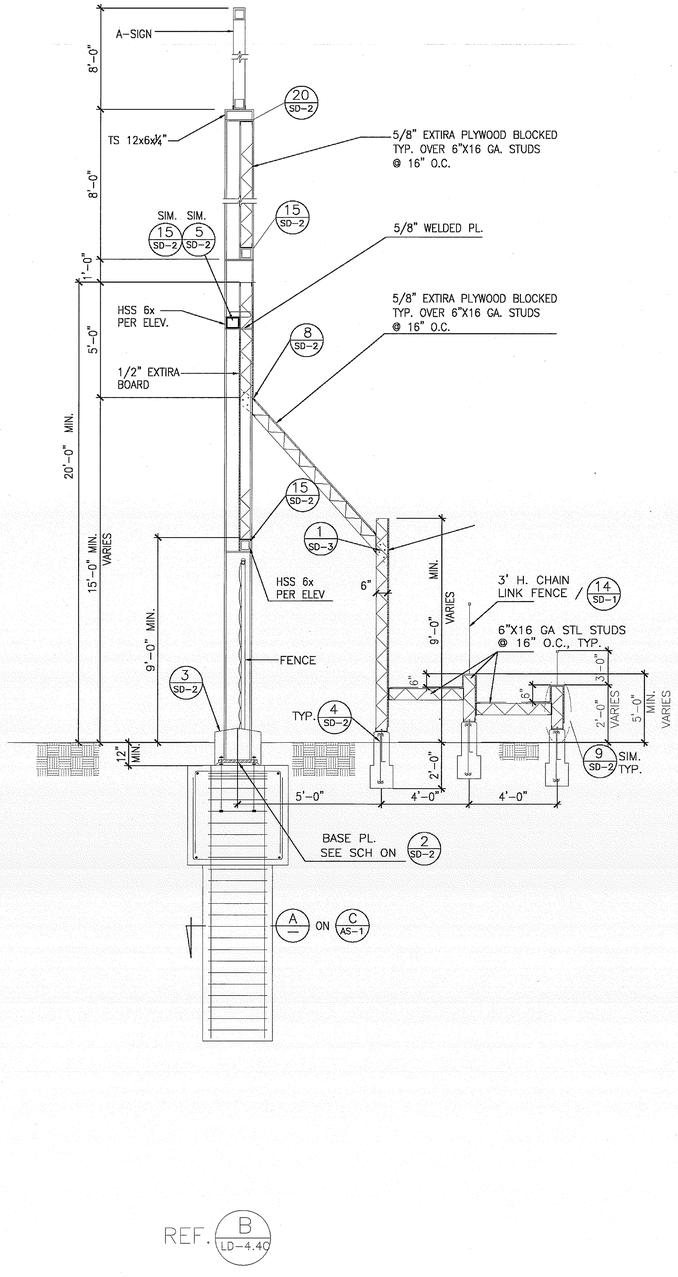

2 SECTION NO SCALE

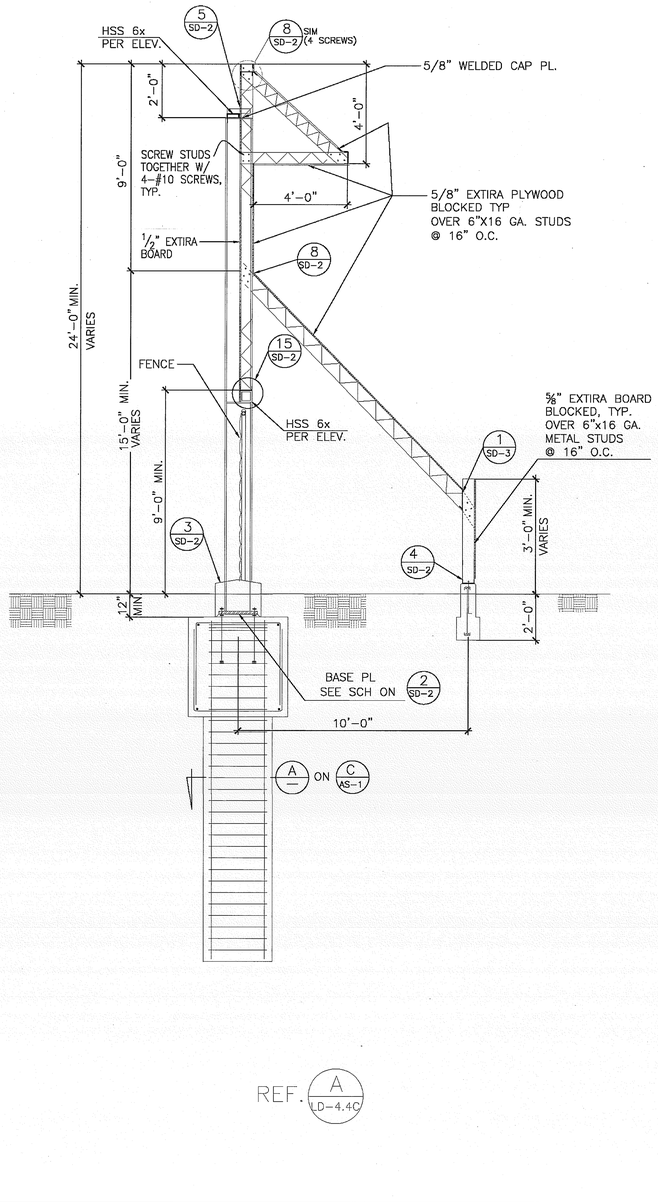

1 SECTION NO SCALE

MIG
MOORE IACOFANO GOLTSMAN, INC.
801 N. HARBOR BLVD. FULLERTON, CA 92831
TEL 714/871-3638 FAX 714/871-1188 www.migcom.com

CONSULTANT:
CORREIA CONSULTING & DESIGN
STRUCTURAL ENGINEERS
16912 bolsa chica road, suite 101 huntington beach, ca 92649
714 840-5582

PROJECT TEAM:
LANDSCAPE ARCHITECT MOORE IACOFANO GOLTSMAN, INC.
ARCHITECT PITASSI ARCHITECTS INC.
CIVIL ENGINEERS/SURVEYOR WALDEN & ASSOCIATES
STRUCTURAL ENGINEERS CORREIA CONSULTING & DESIGN
ELECTRICAL ENGINEERS LRA ENGINEERS
IRRIGATION DESIGNER WILLIAMS IRRIGATION DESIGN
GEOTECHNICAL ENGINEERS CONVERSE CONSULTANTS
TURF GRASS CONSULTANT GUISE AND ASSOCIATES

PERRIS VALLEY Big League Dreams

2155 Trumble Road
Perris, California, 92570

SHEET TITLE
ANGEL STADIUM SECTIONS

100% CONSTRUCTION DOCUMENT

DATE	REVISIONS

STAMP
REGISTERED PROFESSIONAL ENGINEER WILLIAM J. CORREIA No. 2132 Exp.12/31/09 STRUCTURAL STATE OF CALIFORNIA
(08047)

CHECKED BY	DATE
XX	07/30/09
DATE 7-30-09	FILE NAME
DRAWN BY STAFF	SHEET AS-3
JOB NO. 05208.00	OF 311 SHEETS
SCALE AS NOTED	