NOTES:

1. REFER TO SPECS. FOR CHAIN LINK FENCE MATERIALS AND INSTALLATION.

2. CONCRETE FOOTINGS TO BE ALLOWED TO SET FOR SEVEN DAYS PRIOR TO INSTALLATION OF GATES.

3. GATES SHALL BE FURNISHED W/ WINDSCREEN. REFER TO SPECS.

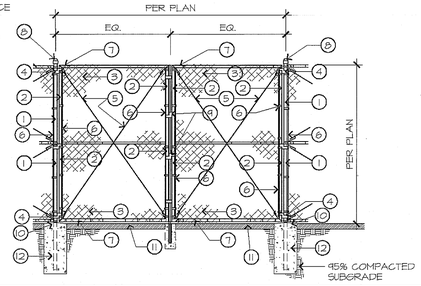

GATE MATERIALS

1. POSTS: POST 3-1/2 IN. O.D. PER SPECS.
2. GATE FRAMES: TOP, BOTTOM AND SIDE MEMBERS 2-⅜" O.D., MID RAIL 1 5/8" O.D. MITER GATE FRAME CORNERS WELD AND GRIND SMOOTH, PER SPECS.
3. FABRIC: 9 GAUGE, 2 IN. MESH, KNUCKLE TOP AND BOTTOM, PLACE ON ACTIVITY OR TURF SIDE OF GATES.
4. HINGES: INDUSTRIAL BULLDOG HINGES (180° SWING), 2 HINGES PER GATE, ONE AT TOP AND BOTTOM.
5. TRUSS ROD: 3/8 IN. DIAM. THREADED AT BOTH ENDS AND TENSIONED WITH TWO INDUSTRIAL TRUSS TIGHTENERS SECURED TO GATE FRAME.
6. STRETCHER BAR: 3/16 X 3/4 IN. WITH 1/8 X 1 IN. TENSION BANDS AT 1'-0" O.C.
7. TIE WIRES: 11 GAUGE AT 1'-6" O.C. AT GATE FRAME TOP, BOTTOM AND MID RAILS.
8. POST CAPS SHALL BE CAST ALUMINUM
9. DROP ROD LATCH (LOCKABLE)
10. PROVIDE A (1) INCH CROWN AT TOP OF ALL POST FOOTING
11. PAVING, REFER TO CALL OUT PLAN
12. 18" Ø X 5'-0" DEEP CONC. POST FOOTING

M CHAIN LINK GATE - DOUBLE — NO SCALE

NOTE:
INSTALL EXPANSION JOINTS EVERY 20' O.C.

FINISH TO BE SMOOTH TROWEL UNLESS OTHERWISE NOTED.

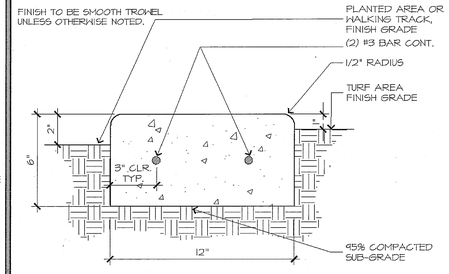

E 12-IN. CONCRETE MOWBAND — NO SCALE

NOTE:
EXPANSION/TRANSVERSE JOINT SHALL BE SPACED EVERY 15' O.C. SCORE LINES SHALL BE SPACED EVERY 10' O.C. UNLESS SHOWN OTHERWISE. A 2% CROSS SLOPE MAXIMUM SHALL OCCUR ON ALL PAVING. SAWCUT JOINTS TO BE 1/8" WIDE X 1" DEEP SAWCUTS. JOINTS TO OCCUR AT ALL CONCRETE CORNERS. APPLY THICKENED EDGE AS REQUIRED PER PLAN.

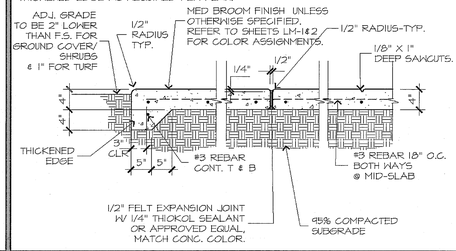

A 4-IN. CONCRETE PAVING — NO SCALE

NOTES:

1. REFER TO SPECS. FOR CHAIN LINK FENCE MATERIALS AND INSTALLATION.

2. CONCRETE FOOTINGS TO BE ALLOWED TO SET FOR SEVEN DAYS PRIOR TO INSTALLATION OF GATE.

3. GATE MATERIALS MANUFACTURED BY: HOOVER FENCE CO.
PH#(800)355-2335
WEBSITE:
www.hoooverfence.com
OR APPROVED EQUAL

SCHEDULE	
POST HEIGHT	FOOTING
10' HT.	18"Ø X 5'-0"

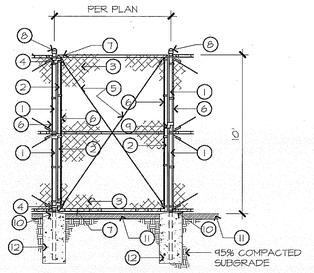

GATE MATERIALS

1. POSTS: POST 3-1/2 IN. O.D. PER SPECS.
2. GATE FRAMES: TOP, BOTTOM AND SIDE MEMBERS 2-3/8 IN. O.D., MID RAIL 1 5/8" O.D. MITER GATE FRAME CORNERS WELD AND GRIND SMOOTH.
3. FABRIC: 9 GAUGE, 2 IN. MESH, KNUCKLE TOP AND BOTTOM, PLACE ON ACTIVITY OR TURF SIDE OF GATES.
4. HINGES: INDUSTRIAL BULLDOG HINGES (180° SWING), 2 HINGES PER GATE, ONE AT TOP AND BOTTOM.
5. TRUSS ROD: 3/8" DIA. THREADED AT BOTH ENDS AND TENSIONED WITH TWO INDUSTRIAL TRUSS TIGHTENERS SECURED TO GATE FRAME.
6. STRETCHER BAR: 3/16" X 3/4" WITH 1/8" X 1" TENSION BANDS AT 1'-0" O.C.
7. TIE WIRES: 11 GAUGE AT 1'-6" O.C. AT GATE FRAME TOP, BOTTOM AND MID RAILS.
8. POST CAPS SHALL BE CAST ALUMINUM
9. PRESSED STEEL GALV. SINGLE GATE FORK LATCH (LOCKABLE)
10. PROVIDE A (1) INCH CROWN AT TOP OF ALL POST FOOTING
11. PAVING, REFER TO CALL OUT PLAN
12. POST FOOTING REFER TO SCH., THIS DETAIL

N 10' HIGH CHAIN LINK GATE - SINGLE — NO SCALE

GRAIN LINK FENCE POST SIZE					
TYPE	POSTS	NOM. DIA.	LBS/ FT.	FOOT'G DEPTH	FOOT'G DIA.
1	3'-6" LINE	1 1/2"	2.72	3'-6"	1'-0"
1	3'-6" END	1 1/2"	2.72	3'-6"	1'-0"
1	3'-6" CORNER	1 1/2"	2.72	3'-6"	1'-0"
1	6' LINE	2"	3.65	4'-0"	1'-0"
1	6' END	2"	3.65	4'-0"	1'-0"
1	6' CORNER	2"	3.65	4'-0"	1'-0"
2	6' LINE W/ HS	3"	7.58	5'-4"	2'-0"
2	6' END W/ HS	3"	7.58	5'-4"	2'-0"
2	6' CNR W/ HS	3"	7.58	5'-4"	2'-0"
2	10' LINE W/ HS	3 ½"	9.11	6'-6"	2'-0"
2	10' END W/ HS	3 ½"	9.11	6'-6"	2'-0"
2	10' CORNER W/ HS	3 ½"	9.11	6'-6"	2'-0"
1	25' BKSTP POST	6"	14.97	7'-0"	2'-0"
2	25' BKSTP NETTING	10"	40.48	17'-0"	2'-6"
2	27' BKSTP NETTING	10"	40.48	17'-0"	2'-6"
1	TOP, BOTTOM RAIL, HORIZ. BRACE	1 1/4"	2.27	-	-

GRAIN LINK FENCE MATERIAL

GRAIN LINK FABRIC - 2" MESH, 9 GA. GALV. TRUSS RODS - 3/8" DIA. GALV. ROD STRETCHER BAR 1/4" X 3/4".

NOTES:

1. ALL GRAIN LINK FABRIC TO BE KNUCKLED SELVAGE - TOP AND BOTTOM.
2. ALL GRAIN LINK FENCE SHALL HAVE BOTTOM RAILS.
3. POST DIA. GIVEN AT LEFT, REFER TO STD. NOMINAL PIPE SIZE.
4. FOR CLF W/ WINDSCREEN, REFER TO POST DIA. & FTG. DEPTH & DIA. AT LEFT.
5. FOR CLF W/ INSERT SLATS, REFER TO POST DIA. & FTG. DEPTH & DIA. AT LEFT.
6. ALL POST SHALL BE SPACED AT 8'-0" O.C. MAX.

ABBRV:

HS	WINDSCREEN
IS	INSERT SLATS
CNR	CORNER
CLF	CHAIN LINK FENCE

TYPE:
1 - ASTM A653, GRADE B (55 KSI YIELD)
2 - ASTM A569, GRADE IA (80KSI YIELD)

F C.L.F. SCHEDULE — NO SCALE

NOTES:

1. ALL CHAIN LINK FENCE SHALL BE 2" MESH 9 GAUGE

2. ALL CHAIN LINK FABRIC SHALL BE KNUCKLED SALVAGE TOP AND BOTTOM

3. REFER TO CALL OUT PLAN FOR HEIGHT OF FENCE.

4. SEE SCHEDULE (F / LD-11)

5. ALL FENCING SHALL HAVE RAILING AT TOP & BOTTOM

6. REFER TO CALLOUT PLAN FOR LOCATION OF C.L.F. W/ WINDSCREEN ATTACHED ON THE SIDE INDICATED BY THE AGENCY REPRESENTATIVE

7. ALL 42" HIGH FENCE & ALL 8' HIGH HOMERUN FENCE @ MINOR LEAGUE FIELDS SHALL BE FURNISHED W/ PVC FENCE CAP. REFER TO SPECS. COLOR TO BE DETERMINED.

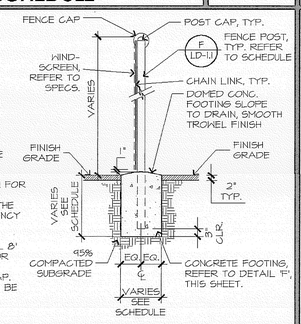

G CHAIN LINK FENCE — NO SCALE

NOTE:
INSTALL EXPANSION JOINTS EVERY 20' O.C.

FINISH TO BE SMOOTH TROWEL UNLESS OTHERWISE NOTED.

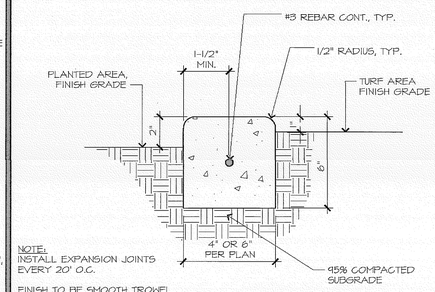

C 4/6-IN. CONCRETE MOWBAND — NO SCALE

NOTES:

1. REFER TO SPECS. FOR CHAIN LINK FENCE MATERIALS AND INSTALLATION.

2. CONCRETE FOOTINGS TO BE ALLOWED TO SET FOR SEVEN DAYS PRIOR TO INSTALLATION OF GATES.

3. GATES SHALL BE FURNISHED W/ WINDSCREEN. REFER TO SPECS.

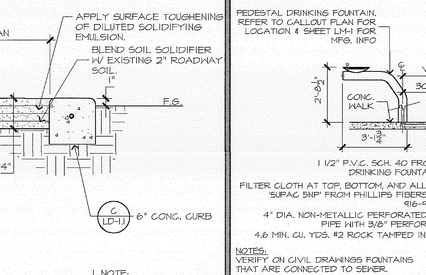

1. NOTE:
SLOPE D.G. 2% MIN. TO DRAIN.

MFG: REFER TO SPECS

O D.G. PATHWAY — NO SCALE

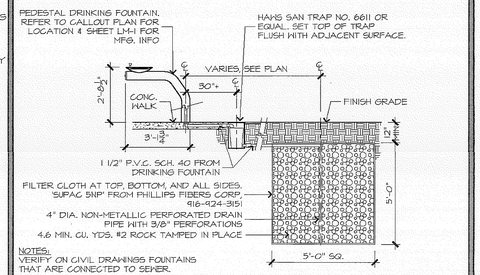

NOTES:
VERIFY ON CIVIL DRAWINGS FOUNTAINS THAT ARE CONNECTED TO SEWER.

K DRINKING FOUNTAIN — NO SCALE

NOTES:

1. ALL CHAIN LINK FENCE SHALL BE 2" MESH 9 GAUGE

2. ALL CHAIN LINK FENCE SHALL BE KNUCKLED SALVAGE TOP AND BOTTOM

3. REFER TO CALL OUT PLAN FOR HEIGHT OF FENCE.

4. SEE C.L.F. SCHEDULE (F / LD-11)

5. ALL FENCING SHALL HAVE RAILING AT TOP & BOTTOM

6. REFER TO CALLOUT PLAN FOR LOCATION OF C.L.F. WITH WINDSCREEN ATTACHED ON THE SIDE INDICATED BY THE AGENCY REPRESENTATIVE

7. SEE DETAIL (G / LD-11) FOR REMAINDER OF NOTES.

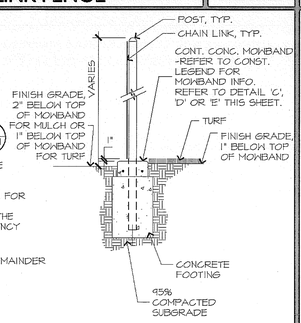

H C.L.F. W/ MOWBAND — NO SCALE

NOTE:
INSTALL EXPANSION JOINTS EVERY 20' O.C.

FINISH TO BE SMOOTH TROWEL UNLESS OTHERWISE NOTED.

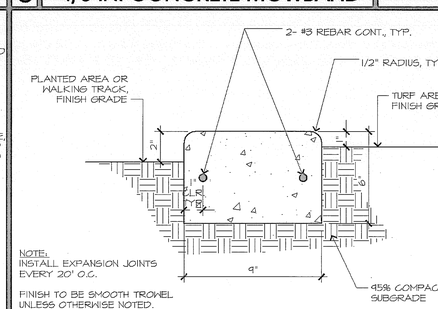

D 9-IN. CONCRETE MOWBAND — NO SCALE

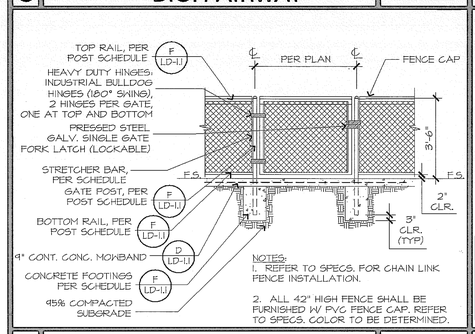

NOTES:
1. REFER TO SPECS. FOR CHAIN LINK FENCE INSTALLATION.

2. ALL 42" HIGH FENCE SHALL BE FURNISHED W/ PVC FENCE CAP. REFER TO SPECS. COLOR TO BE DETERMINED.

P 42" CHAIN LINK GATE — NO SCALE

NOTES:

1. REFER TO CALL OUT PLAN FOR HEIGHT OF POST AND WIDTH OF CONC. MOWBAND

2. SEE C.L.F. SCHEDULE (F / LD-11)

3. REFER TO CALL OUT PLAN FOR LOCATION OF C.L.F. W/ WINDSCREEN ATTACHED ON THE SIDE INDICATED BY THE AGENCY REPRESENTATIVE

4. ALL FENCING SHALL HAVE RAILING AT BOTTOM

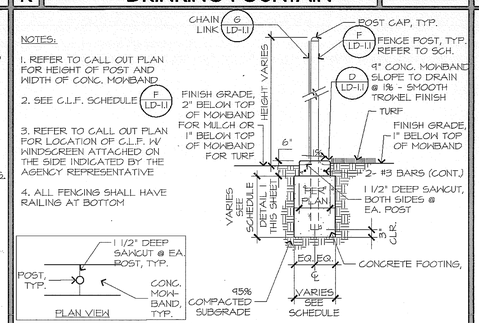

L CHAIN LINK POST W/ MOWBAND — NO SCALE

MIG

MOORE IACOFANO GOLTSMAN, INC.
801 N. HARBOR BLVD.
FULLERTON, CA 92832
TEL 714/871-2638
FAX 714/871-1188
www.migcom.com

CONSULTANT:

PROJECT TEAM:

LANDSCAPE ARCHITECT
MIG INC.

ARCHITECT
PITASSI ARCHITECTS INC.

CIVIL ENGINEERS/SURVEYOR
WALDEN & ASSOCIATES

STRUCTURAL ENGINEERS
CORREIA CONSULTING & DESIGN

ELECTRICAL ENGINEERS
LRA ENGINEERS

IRRIGATION DESIGNER
WILLIAMS IRRIGATION DESIGN

GEOTECHNICAL ENGINEERS
CONVERSE CONSULTANTS

TURF GRASS CONSULTANT
GUISE AND ASSOCIATES

PERRIS VALLEY Big League Dreams

2155 Trumble Road
Perris, California, 92570

SHEET TITLE

GENERAL DETAILS

100% CONSTRUCTION DOCUMENT

DATE	REVISIONS

STAMP

CHECKED BY	DATE
RE	
DATE 01-07-10	FILE NAME
DRAWN BY HD	SHEET LD-1.1
JOB NO. 05208.00	
SCALE AS NOTED	209 OF 313 SHEETS