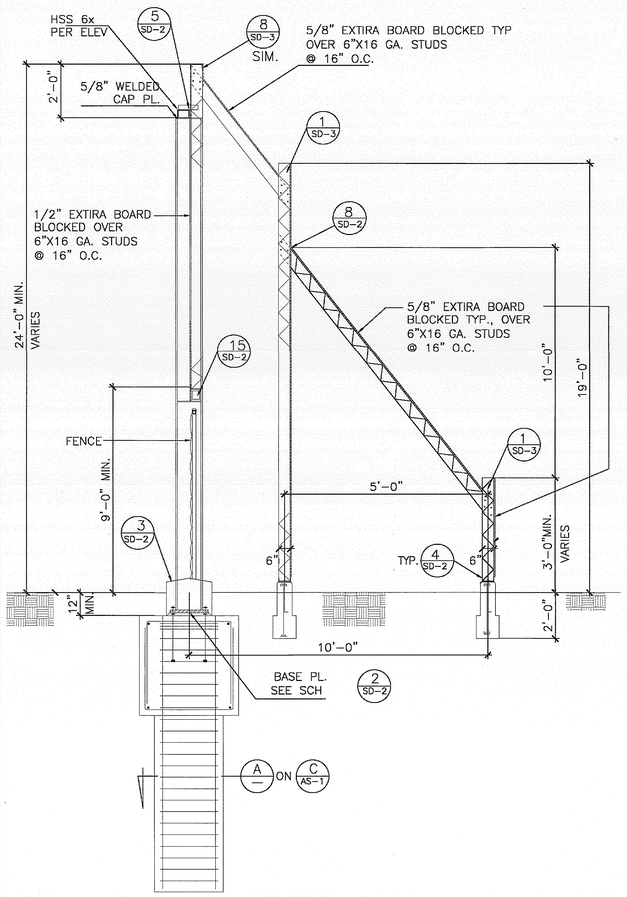

REF. F LD-4.4c

6 SECTION NO SCALE

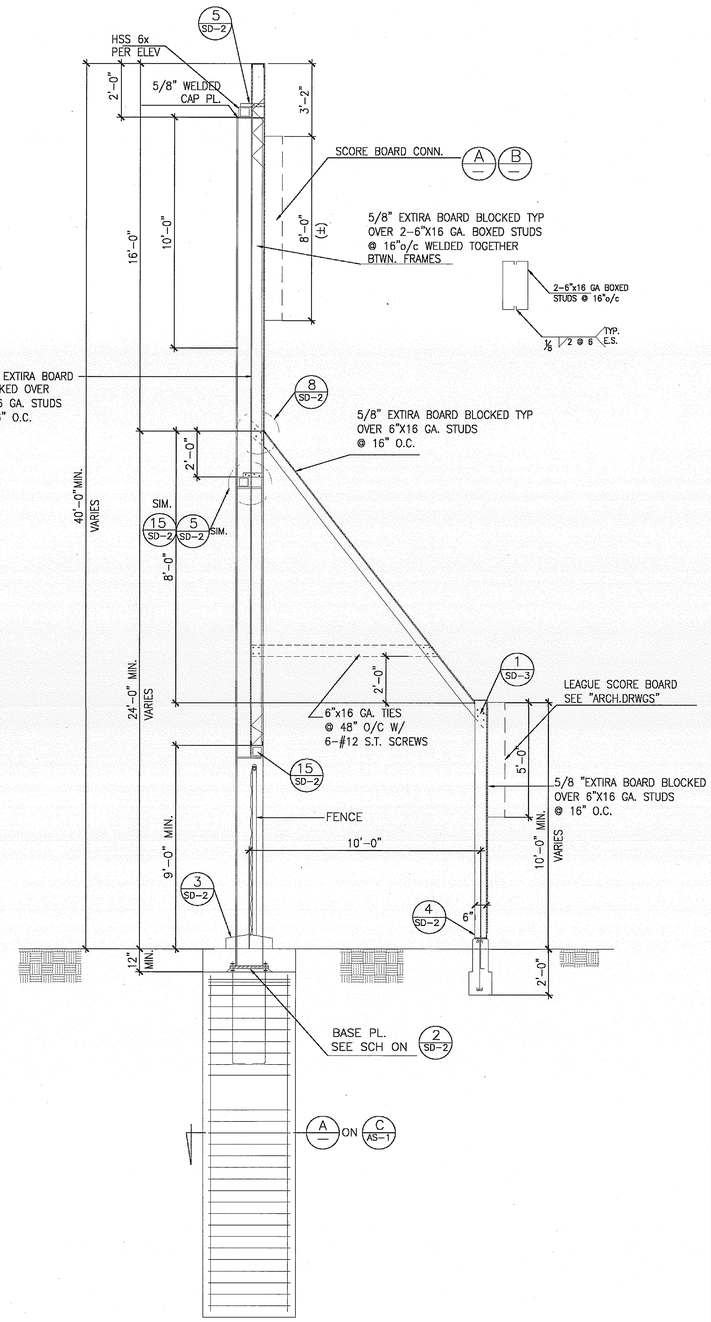

REF. E LD-4.4c

5 SECTION NO SCALE

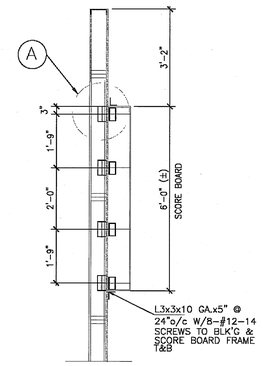

SIDE VIEW OF SCORE BOARD

B DETAIL

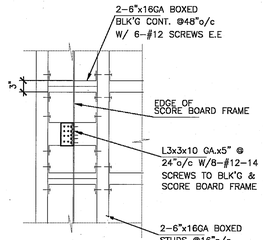

FRONT VIEW
CONN. DETAIL

A DETAIL

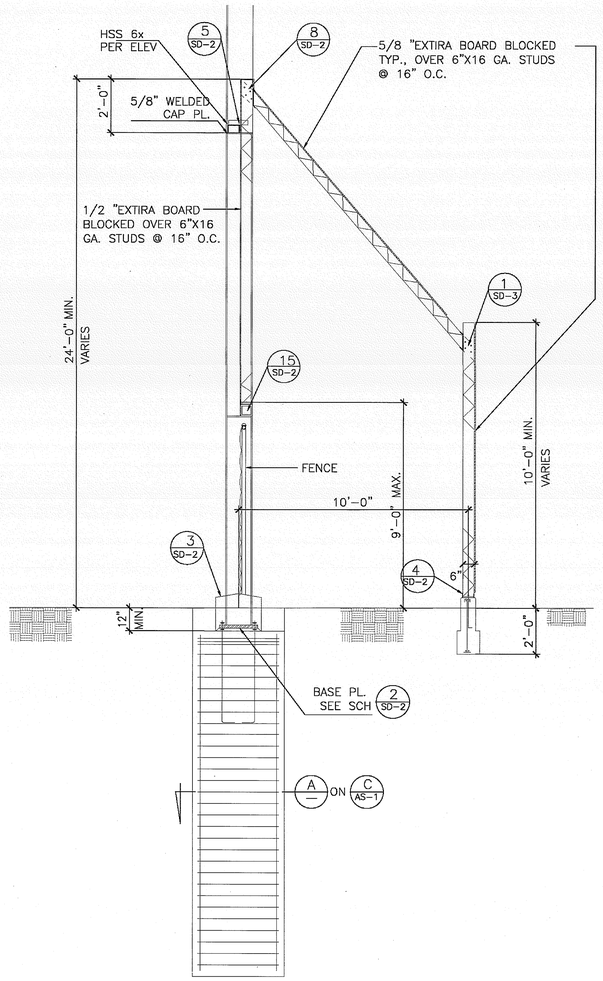

REF. D LD-4.4c

4 SECTION NO SCALE

MOORE IACOFANO GOLTSMAN, INC.
801 N. HARBOR BLVD.
FULLERTON, CA 92831
TEL 714/871-3638
FAX 714/871-1188
www.migcom.com

CONSULTANT:

CORREIA CONSULTING & DESIGN
STRUCTURAL ENGINEERS
16912 bolsa chica road, suite 101
huntington beach, ca 92649
714 840-5582

PROJECT TEAM:

LANDSCAPE ARCHITECT
MOORE IACOFANO GOLTSMAN, INC.

ARCHITECT
PITASSI ARCHITECTS INC.

CIVIL ENGINEERS/SURVEYOR
WALDEN & ASSOCIATES

STRUCTURAL ENGINEERS
CORREIA CONSULTING & DESIGN

ELECTRICAL ENGINEERS
LRA ENGINEERS

IRRIGATION DESIGNER
WILLIAMS IRRIGATION DESIGN

GEOTECHNICAL ENGINEERS
CONVERSE CONSULTANTS

TURF GRASS CONSULTANT
GUISE AND ASSOCIATES

PERRIS VALLEY Big League Dreams

2155 Trumble Road
Perris, California, 92570

SHEET TITLE

100% CONSTRUCTION DOCUMENT

DATE	REVISIONS

STAMP

REGISTERED PROFESSIONAL ENGINEER
WILLIAM J. CORREIA
No. 2132
Exp.12/31/09
STRUCTURAL
STATE OF CALIFORNIA

(08047)

CHECKED BY	DATE
XX	07/30/09

DATE 7-30-09

FILE NAME

DRAWN BY STAFF

JOB NO. 05208.00

SCALE

SHEET AS-4

OF 311 SHEETS