CONSTRUCTION NOTES:

1. ALL FORMS AND ALIGNMENTS OF PAVING, LAYOUT, AND SPECIAL PAVING AREAS SHALL BE REVIEWED AND APPROVED BY THE OWNER'S AUTHORIZED REPRESENTATIVE PRIOR TO POURING (GIVE A MINIMUM OF 48 HOURS NOTICE.
2. CONTRACTOR SHALL VERIFY LOCATION OF ALL UTILITIES PRIOR TO CONSTRUCTION AND SHALL BE HELD LIABLE FOR ALL DAMAGES INCURRED.
3. CONTRACTOR SHALL NOTE AND INSTALL SLEEVE LOCATIONS SHOWN ON IRRIGATION PLANS IN EXCESS OF EXISTING SLEEVES PER OWNER'S APPROVAL.
4. ALL CONSTRUCTION AND WORKMANSHIP SHALL CONFORM TO THE LATEST EDITION OF THE STANDARD SPECIFICATIONS FOR PUBLIC WORKS.
5. THESE NOTES SHALL BE USED IN CONJUNCTION WITH THE PLANS AND ANY DISCREPANCIES SHALL BE BROUGHT TO THE ATTENTION OF THE LANDSCAPE ARCHITECT AND OWNER'S REPRESENTATIVE.
6. CONTRACTOR MUST CHECK ALL DIMENSIONS, FRAMING CONDITIONS AND SITE CONDITIONS BEFORE STARTING WORK. LANDSCAPE ARCHITECT SHALL BE NOTIFIED IMMEDIATELY OF ANY DISCREPANCIES OR POSSIBLE DEFICIENCIES.
7. CONDITIONS NOT SPECIFICALLY SHOWN SHALL BE CONSTRUCTED SIMILAR TO THE DETAILS FOR THE RESPECTIVE MATERIALS.
8. THE DRAWINGS AND SPECIFICATIONS REPRESENT THE FINISHED WORK. ALL BRACING, TEMPORARY SUPPORTS, SHORING, MASONRY, ETC. IS THE SOLE RESPONSIBILITY OF THE CONTRACTOR. OBSERVATION VISITS TO THE JOB SITE BY THE LANDSCAPE ARCHITECT DOES NOT INCLUDE INSPECTION OF CONSTRUCTION METHODS AND SAFETY CONDITIONS AT THE WORKSITE. THESE VISITS SHALL NOT BE CONSTRUED AS CONTINUOUS AND DETAILED INSPECTIONS.
9. CLEAN-UP SHALL TAKE PLACE ON A DAILY BASIS.
10. REFER TO SPECIFICATIONS FOR ANY ADDITIONAL INFORMATION.
11. EXPANSION JOINTS ARE SHOWN AS DIAGRAMMATIC. CONTRACTOR SHALL VERIFY.

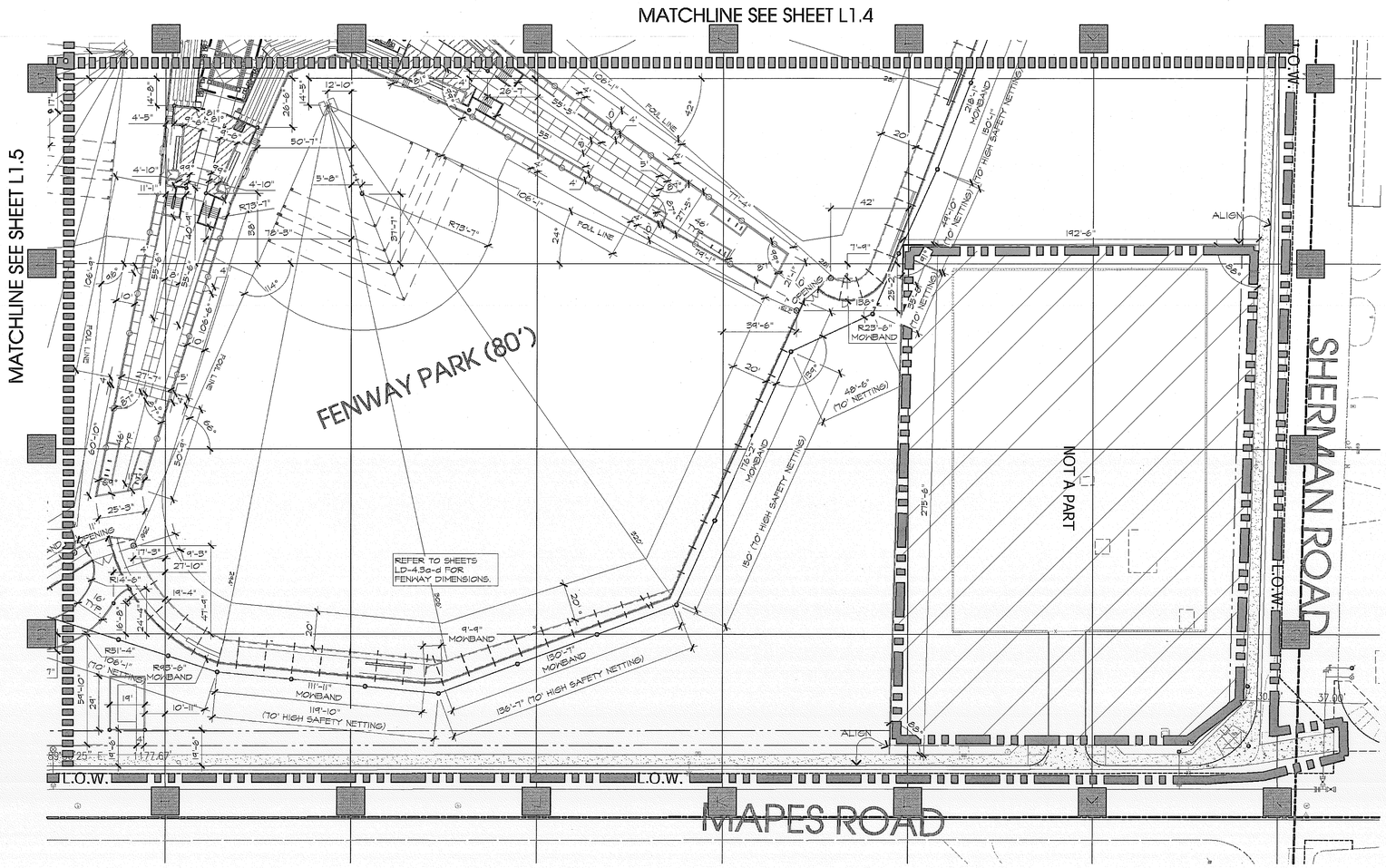

*REFER TO CIVIL DRAWINGS FOR PARKING LOT HORIZONTAL CONTROL.

SYMBOLS / ABBREVIATIONS:

- ACCESSIBLE PARKING SPACE
- CENTER MARK/END MARK
- VERTICAL GRID LINE SPACED 100' APART
- HORIZONTAL GRID LINE SPACED 100' APART
- 6" THICK CONCRETE FIRELANE
- SL — SCORE LINE
- EJ — EXPANSION JOINT

℄	CENTER LINE
CONC.	CONCRETE
TYP.	TYPICAL
R	RADIUS
EXIST.	EXISTING
CLR.	CLEAR
P.A.	PLANTING AREA
F.O.W.	FACE OF WALL
F.O.C.	FACE OF CURB
N.I.C.	NOT IN CONTRACT
D.G.	DECOMPOSED GRANITE
F.G.	FINISHED GRADE
BLDG.	BUILDING
O.C.	ON CENTER
SIM.	SIMILAR
B.O.C.	BEGINNING OF CURVE
E.O.C.	END OF CURVE
PL	PROPERTY LINE

- FENCE LINE
- PROTECTIVE NETTING
- TUBE STEEL FENCING
- P.O.B. - POINT OF BEGINNING - LOCATED AT GRID POINT COORDINATE A-1
- ALIGN
- ARC LENGTH
- ROCK OUTCROPPINGS
- LIMIT OF WORK LINE
- MATCHLINE

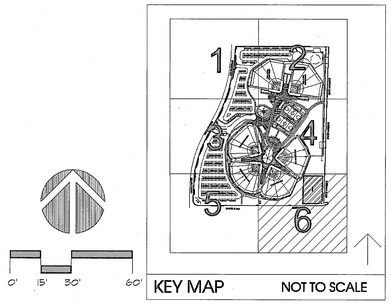

KEY MAP NOT TO SCALE

MIG

MOORE IACOFANO GOLTSMAN, INC.
801 N. HARBOR BLVD.
FULLERTON, CA 92832
TEL 714/871-3638
FAX 714/871-1188
www.migcom.com

CONSULTANT:

PROJECT TEAM:

LANDSCAPE ARCHITECT
MIG INC.

ARCHITECT
PITASSI ARCHITECTS INC.

CIVIL ENGINEERS/SURVEYOR
WALDEN & ASSOCIATES

STRUCTURAL ENGINEERS
CORREIA CONSULTING & DESIGN

ELECTRICAL ENGINEERS
LRA ENGINEERS

IRRIGATION DESIGNER
WILLIAMS IRRIGATION DESIGN

GEOTECHNICAL ENGINEERS
CONVERSE CONSULTANTS

TURF GRASS CONSULTANT
GUISE AND ASSOCIATES

PERRIS VALLEY Big League Dreams

2155 Trumble Road
Perris, California, 92570

SHEET TITLE

DIMENSION PLANS

100% CONSTRUCTION DOCUMENT

DATE	REVISIONS

STAMP

CHECKED BY	DATE
RE	
DATE 01-07-10	FILE NAME
DRAWN BY HD	SHEET L1.6
JOB NO. 05208.00	
SCALE 1"=30'-0"	195 OF 313 SHEETS