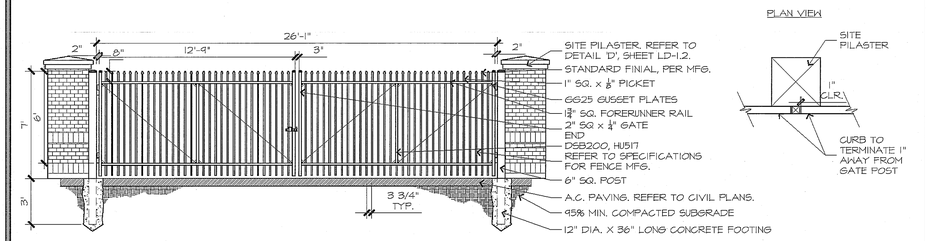

M ORNAMENTAL STEEL VEHICULAR GATE AT MAINTENANCE YARD — NO SCALE

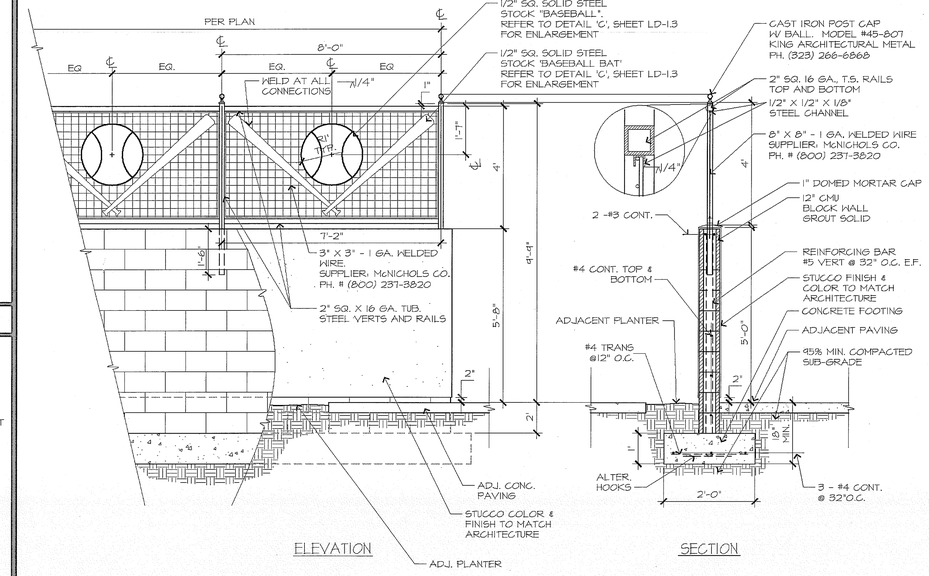

NOTES:
1. REFER TO SPECIFICATIONS FOR ALL FINISH APPLICATION.
2. ALL STEEL & IRON WORK TO BE & PAINTED PER ARCHITECTURAL PLANS. REFER TO SPECS. FOR PAINT APPLICATIONS.

F C.M.U. WALL WITH VINE TRELLIS — NO SCALE

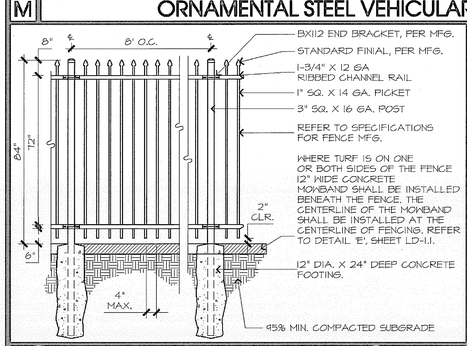

N ORNAMENTAL STEEL FENCE — NO SCALE

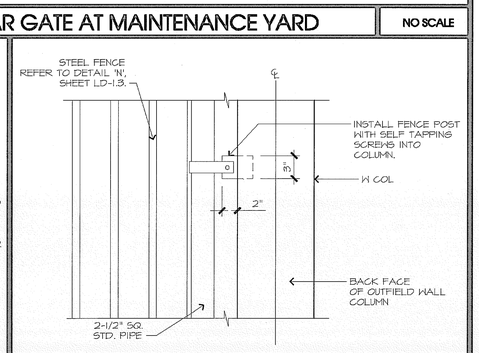

J FENCE CONNEC. TO WALL STUD — NO SCALE

G NOT USED — NO SCALE

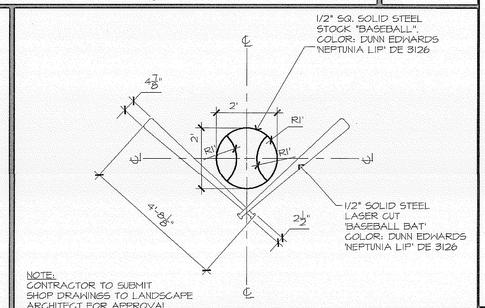

C TRELLIS VINE LOGO — NO SCALE

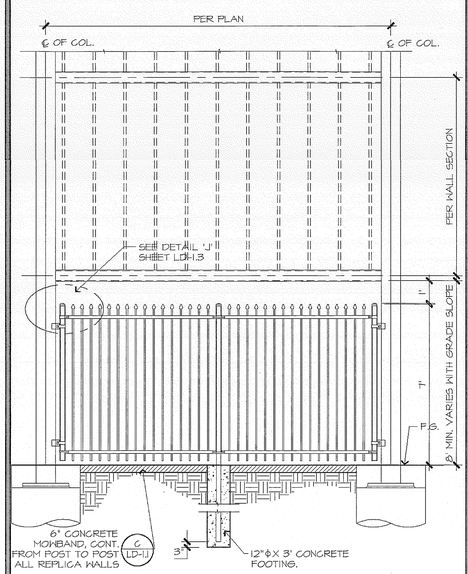

P STEEL FENCE @ BACK OF STADIUM WALL — NO SCALE

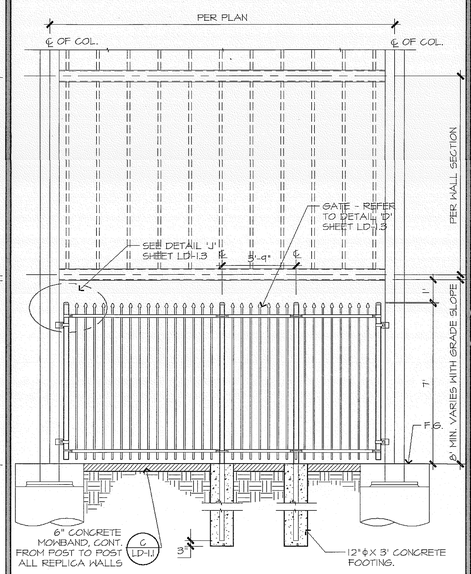

L PEDESTRIAN GATE @ BACK OF WALL — NO SCALE

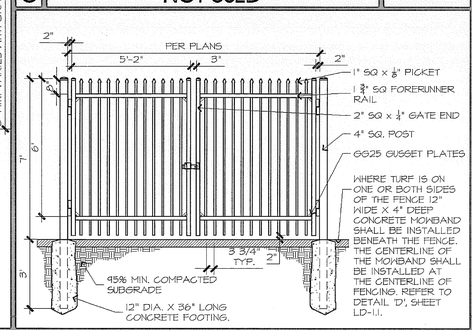

H ORNAMENTAL STEEL DOUBLE GATES — NO SCALE

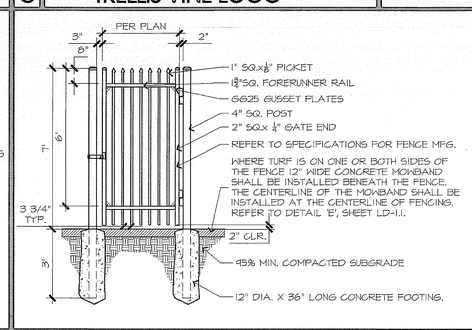

D ORNAMENTAL STEEL GATE — NO SCALE

MIG
MOORE IACOFANO GOLTSMAN, INC.
801 N. PARKER BLVD.
FULLERTON, CA 92832
TEL 714/871-2628
FAX 714/871-1188
www.migcom.com

CONSULTANT:

PROJECT TEAM:

LANDSCAPE ARCHITECT
MIG INC.

ARCHITECT
PITASSI ARCHITECTS INC.

CIVIL ENGINEERS/SURVEYOR
WALDEN & ASSOCIATES

STRUCTURAL ENGINEERS
CORREIA CONSULTING & DESIGN

ELECTRICAL ENGINEERS
LRA ENGINEERS

IRRIGATION DESIGNER
WILLIAMS IRRIGATION DESIGN

GEOTECHNICAL ENGINEERS
CONVERSE CONSULTANTS

TURF GRASS CONSULTANT
GUISE AND ASSOCIATES

PERRIS VALLEY Big League Dreams

2155 Trumble Road
Perris, California, 92570

SHEET TITLE

GENERAL DETAILS

100% CONSTRUCTION DOCUMENT

DATE	REVISIONS

STAMP

CHECKED BY	DATE
RE	

DATE 01-07-10	FILE NAME
DRAWN BY HD	SHEET LD-1.3
JOB NO. 05208.00	
SCALE AS NOTED	211 OF 313 SHEETS