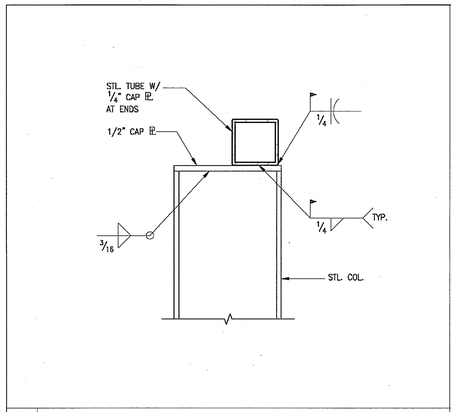

17 DETAIL

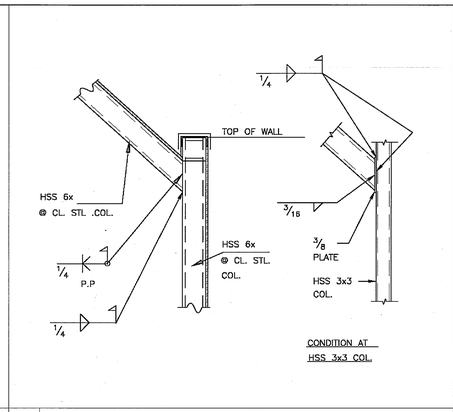

13 DETAIL

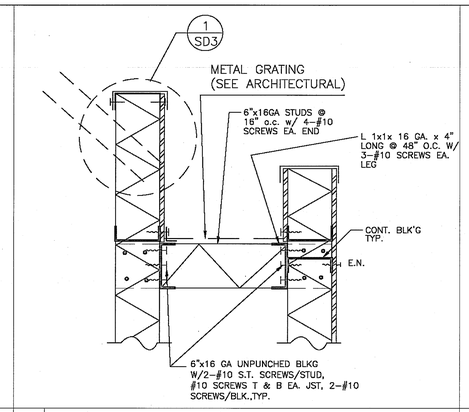

9 STUD WALL DETAIL

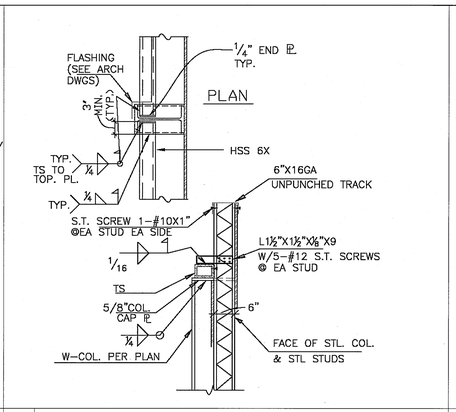

5 WALL TOP CONNECTION

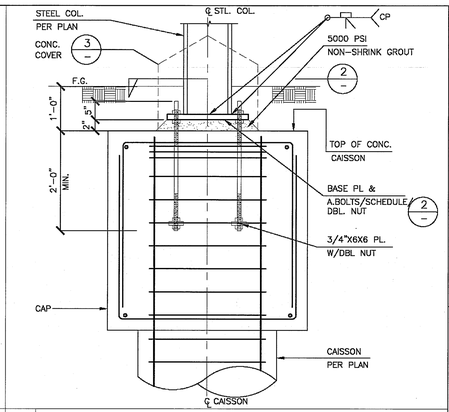

1 STEEL COLUMN FOOTING

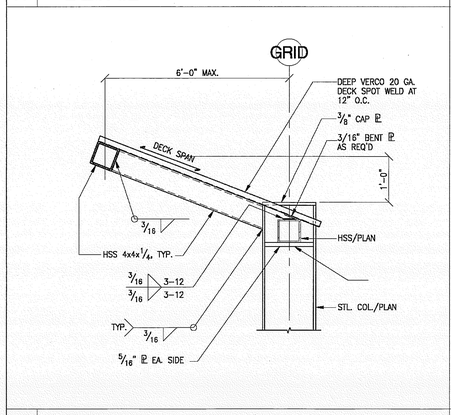

18 DETAIL

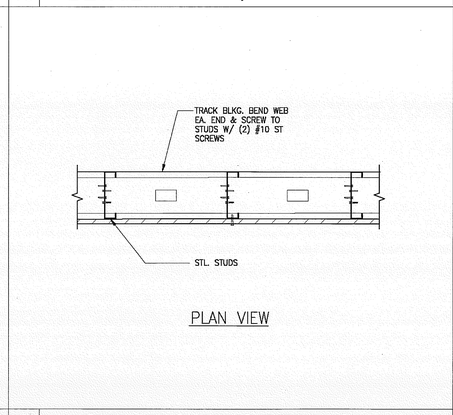

14 HORIZ. BLOCKING DETAILS

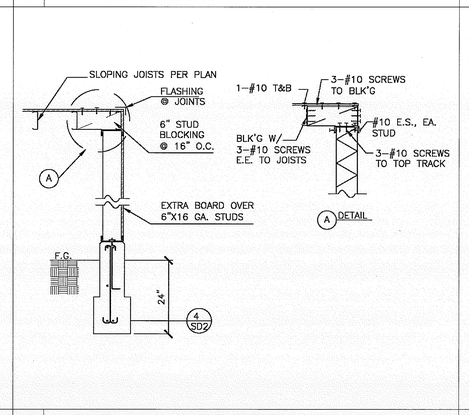

10 END CLOSURE DETAIL

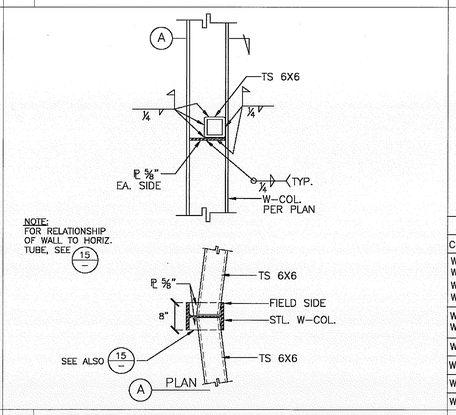

6 TUBE STEEL CONN. AT COLUMN

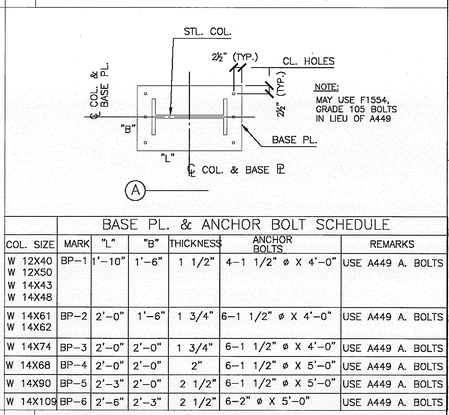

BASE PL. & ANCHOR BOLT SCHEDULE

COL. SIZE	MARK	"L"	"B"	THICKNESS	ANCHOR BOLTS	REMARKS
W 12X40 W 12X50 W 14X43 W 14X48	BP-1	1'-10"	1'-6"	1 1/2"	4-1 1/2" ø X 4'-0"	USE A449 A. BOLTS
W 14X61 W 14X62	BP-2	2'-0"	1'-6"	1 3/4"	6-1 1/2" ø X 4'-0"	USE A449 A. BOLTS
W 14X74	BP-3	2'-0"	2'-0"	1 3/4"	6-1 1/2" ø X 4'-0"	USE A449 A. BOLTS
W 14X68	BP-4	2'-0"	2'-0"	2"	6-1 1/2" ø X 5'-0"	USE A449 A. BOLTS
W 14X90	BP-5	2'-3"	2'-0"	2 1/2"	6-1 1/2" ø X 5'-0"	USE A449 A. BOLTS
W 14X109	BP-6	2'-6"	2'-3"	2 1/2"	6-2" ø X 5'-0"	USE A449 A. BOLTS

2 BASE PLATE & ANCHOR BOLT SCHED

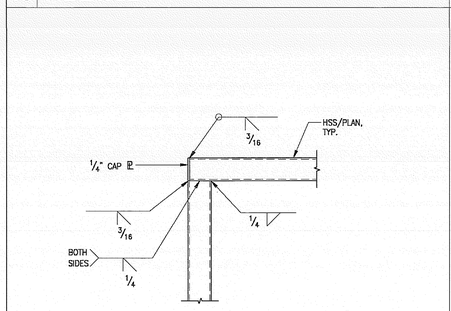

19 DETAIL

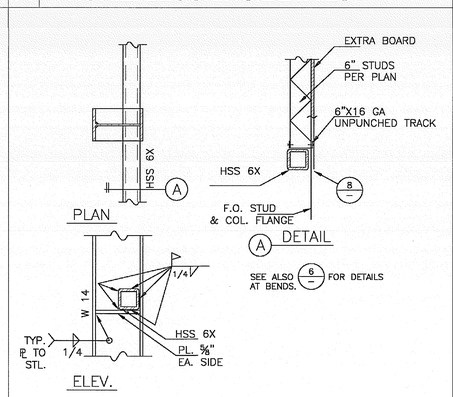

15 DETAIL

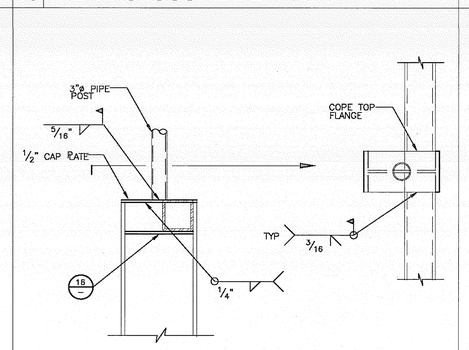

11 NETTING POST CONNECTION

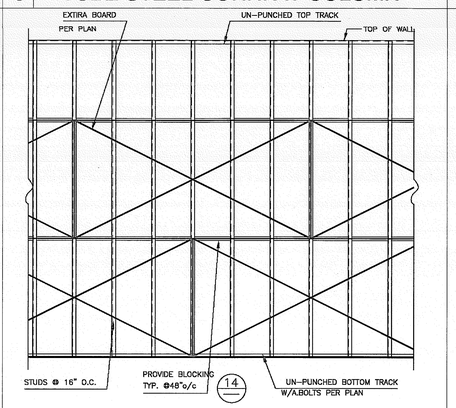

7 WALL BLOCKING DETAIL

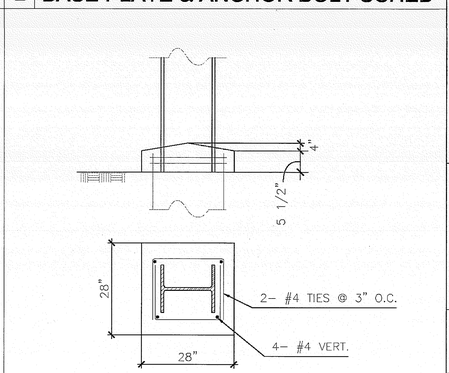

3 CONCRETE BASE AT COLUMN

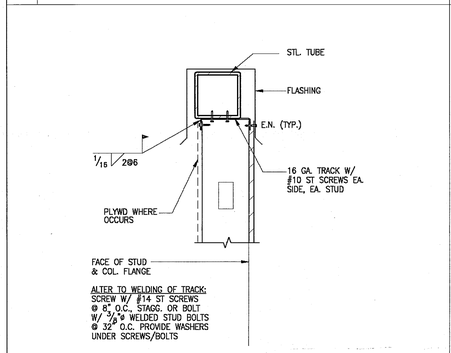

20 DETAIL

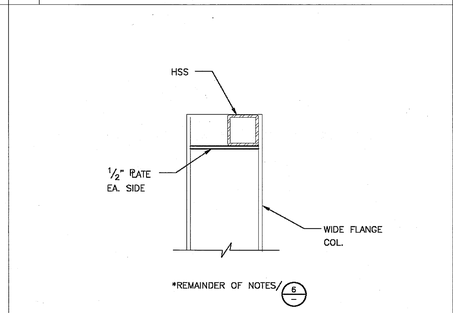

16 DETAIL

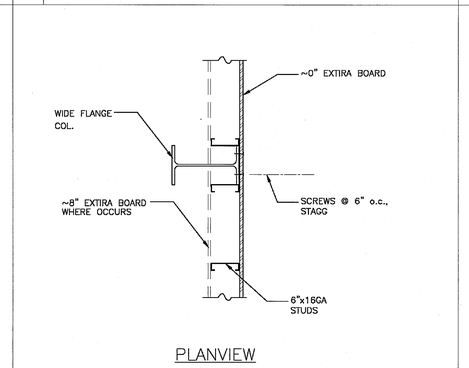

12

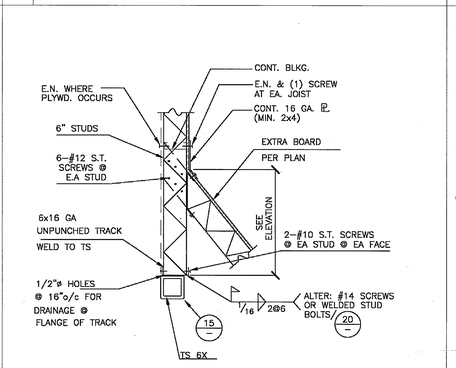

8 SLOPED WALL CONN. AT TOP

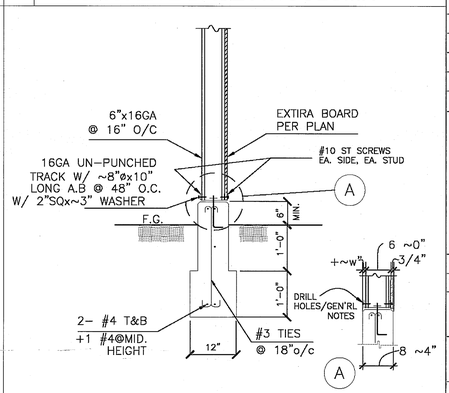

4 WALL FOOTING

STRUCTURAL DETAILS

MIG
MOORE IACOFANO GOLTSMAN, INC.
801 N. HARBOR BLVD.
FULLERTON, CA 92831
TEL 714/871-3638
FAX 714/871-1188
www.migcom.com

CONSULTANT:
CORREIA CONSULTING & DESIGN
STRUCTURAL ENGINEERS
16912 bolsa chica road, suite 101
huntington beach, ca 92649
714 840-5582

PROJECT TEAM:
LANDSCAPE ARCHITECT
MOORE IACOFANO GOLTSMAN, INC.
ARCHITECT
PITASSI ARCHITECTS INC.
CIVIL ENGINEERS/SURVEYOR
WALDEN & ASSOCIATES
STRUCTURAL ENGINEERS
CORREIA CONSULTING & DESIGN
ELECTRICAL ENGINEERS
LRA ENGINEERS
IRRIGATION DESIGNER
WILLIAMS IRRIGATION DESIGN
GEOTECHNICAL ENGINEERS
CONVERSE CONSULTANTS
TURF GRASS CONSULTANT
GUISE AND ASSOCIATES

PERRIS VALLEY Big League Dreams

2155 Trumble Road
Perris, California, 92570

SHEET TITLE
SITE WOR
S

100% CONSTRUCTION DOCUMENT

DATE	REVISIONS

STAMP
REGISTERED PROFESSIONAL ENGINEER WILLIAM J. CORBETT No. 21132 Exp.12/31/09 STRUCTURAL STATE OF CALIFORNIA
(08047)

CHECKED BY	DATE
XX	07/30/09
DATE 7-30-09	FILE NAME
DRAWN BY STAFF	SHEET SD-2
JOB NO. 05208.00	OF 311 SHEETS
SCALE AS NOTED	