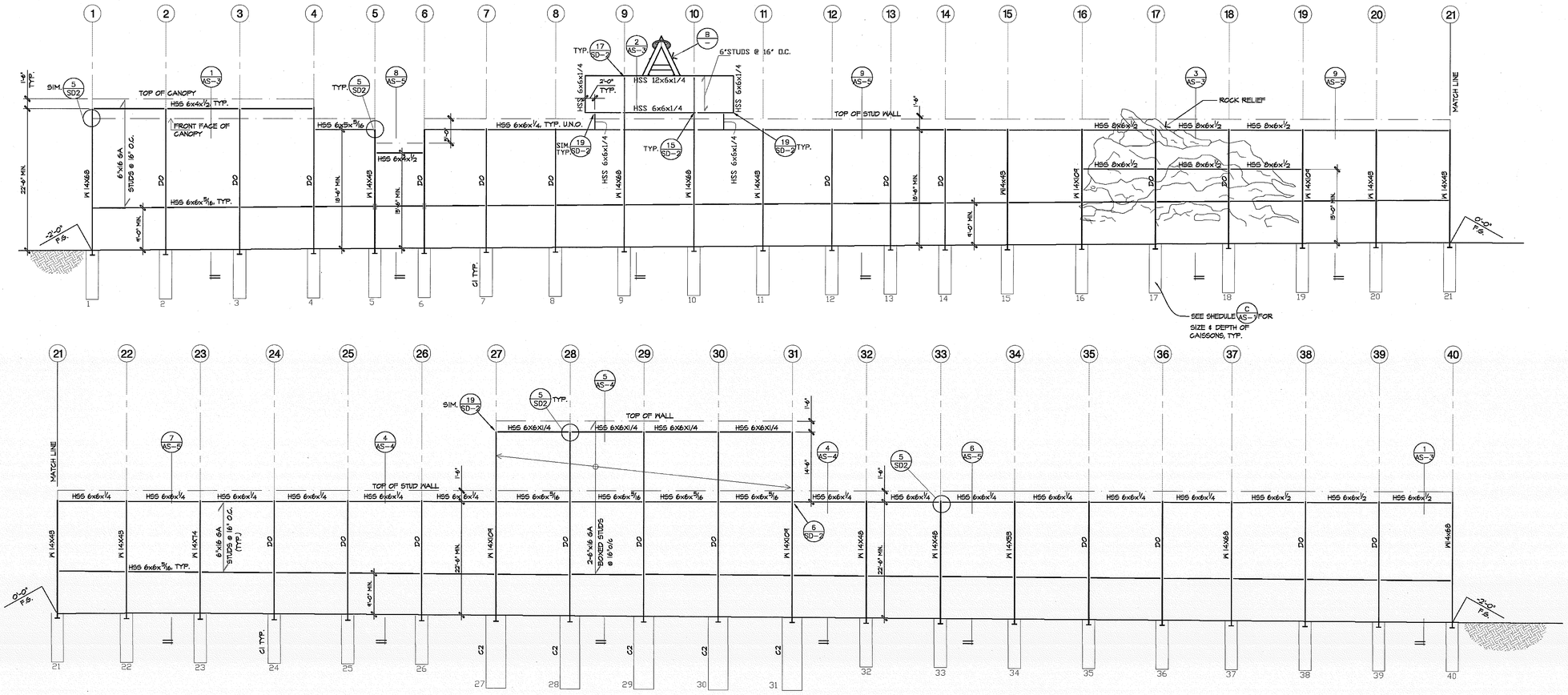

OUTFIELD FENCING SCHEMATIC ELEVATION

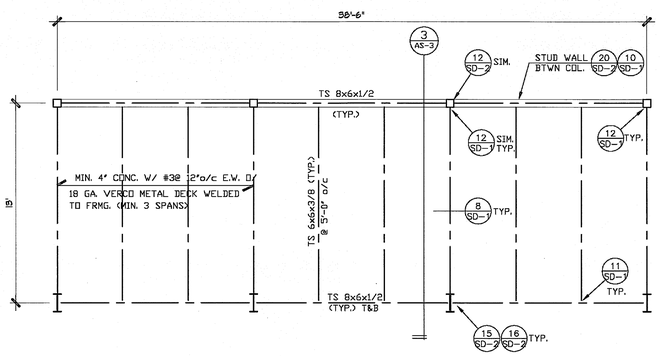

2 FRAMING PLAN @ ROCK AREA

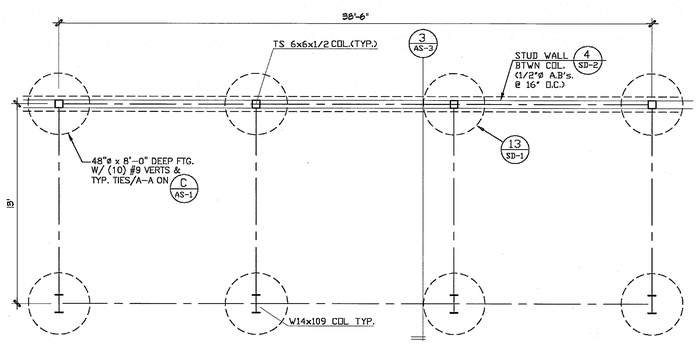

1 FOUNDATION PLAN @ ROCK AREA

FRAMING NOTES

1. SEE SHEET GN-1 FOR GENERAL NOTES AND SHEET SD-1 FOR TYPICAL DETAILS.
2. TOP OF SLAB ON GRADE ELEVATION SEE LANDSCAPE ARCHITECT/CIVIL.
3. TOP OF FOOTING SHALL BE A MINIMUM OF 1'-0" BELOW GRADE U.N.O.
4. SLAB ON GRADE: 5" THICK WITH #4 @ 18" O.C. EACH WAY AT CENTER OF SLAB. SEE LANDSCAPE ARCH'L. DRAWINGS FOR SLOPES, DEPRESSIONS, SLAB EDGES, ETC.
5. TOP OF STEEL SEE WALL ELEVATIONS. VERIFY ELEVATIONS WITH LANDSCAPE ARCHITECT.
6. DECK SHALL BE 3" x 16 GA. VERCO N-24 VENTED DECK OR EQUAL (G80 GALV.) PROVIDE VENTS. DECK SHALL SPAN CONTINUOUS OVER 3 OR MORE SPANS (4 SUPPORTS). WELD #3 BARS TO SUPPORTING MEMBERS AT 12" O.C. SEE LANDSCAPE ARCHITECTURAL DRAWINGS FOR WATERPROOFING, ETC.

   WELD DECK USING 1/2"ø PUDDLE WELDS AS FOLLOWS:
   a. PERPENDICULAR BEARINGS: 4 WELDS PER SHEET PER SUPPORT.
   b. PARALLEL EDGES: AT 8" O.C.
   c. SIDE SEAMS: BUTTON PUNCH AT 12" O.C.
   d. WELDED REBAR SHALL BE USED IN LIEU OF PUDDLE WELDS.
7. DO NOT HANG LOADS FROM METAL DECK. PROVIDE ENGINEERED STRUCTURAL SYSTEM TO HANG ALL LOADS FROM STEEL JOISTS OR BEAMS. THIS INCLUDES BUT IS NOT LIMITED TO METAL STUD SOFFIT OR CEILING FRAMING, MECHANICAL OR PLUMBING EQUIPMENT, ETC.

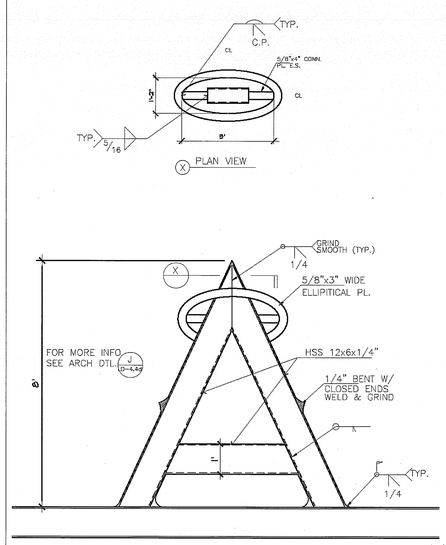

ROCK AREA FOUNDATION & FRAMING PLANS

MOORE IACOFANO GOLTSMAN, INC.
801 N. HARBOR BLVD.
FULLERTON, CA 92831
TEL 714/871-3638
FAX 714/871-1188
www.migcom.com

CONSULTANT:

CORREIA CONSULTING & DESIGN
STRUCTURAL ENGINEERS
16912 bolsa chica road, suite 101
huntington beach, ca 92649
714 840-5582

PROJECT TEAM:

LANDSCAPE ARCHITECT
MOORE IACOFANO GOLTSMAN, INC.

ARCHITECT
PITASSI ARCHITECTS INC.

CIVIL ENGINEERS/SURVEYOR
WALDEN & ASSOCIATES

STRUCTURAL ENGINEERS
CORREIA CONSULTING & DESIGN

ELECTRICAL ENGINEERS
LRA ENGINEERS

IRRIGATION DESIGNER
WILLIAMS IRRIGATION DESIGN

GEOTECHNICAL ENGINEERS
CONVERSE CONSULTANTS

TURF GRASS CONSULTANT
GUISE AND ASSOCIATES

PERRIS VALLEY Big League Dreams

2155 Trumble Road
Perris, California, 92570

SHEET TITLE

ANGEL STADIUM INTERIOR ELEVATIONS

100% CONSTRUCTION DOCUMENT

DATE	REVISIONS

STAMP

REGISTERED PROFESSIONAL ENGINEER WILLIAM J. CORREIA No. 2137 Exp.12/31/09 STRUCTURAL STATE OF CALIFORNIA

(08047)

CHECKED BY	DATE
XX	07/30/09
DATE 7-30-09	FILE NAME
DRAWN BY STAFF	SHEET AS-2
JOB NO. 05208.00	
SCALE 1:20	OF 311 SHEETS